Cleco®
Production Tools

Assembly, Material Removal, Drilling & Riveting Tools

TOOLimpex
CZECH REPUBLIC s.r.o.

Table of Contents.

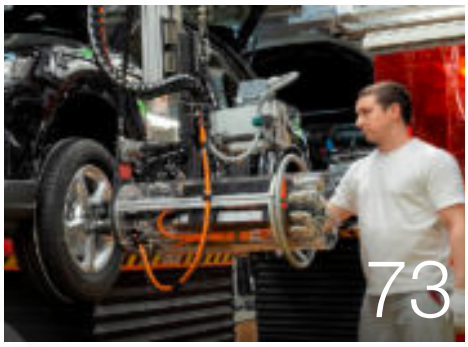

About Cleco® Tools 04

Since inception, Cleco has grown to become a global manufacturing solutions provider, headquartered in the United States, with locations across North America, Europe and Asia.

Assembly Tools 7

Cordless Electric Nutrunners 8
Corded Electric Nutrunners 20
Pneumatic Nutrunners 47
Fixtured Spindles 73
Controllers & Software 101
Impact Wrenches 113
Pulse Tools 117
Electric Torque Wrenches 122
Air Motors 128

Material Removal 165

Grinders 168
Sanders & Polishers 207
Specialty Tools 219

Drilling & Riveting 243

Advanced Drilling 244
Hand Drilling, Countersinking & Spotfacing 256
Riveting 292

Cleco Care 304

Cleco Care provides a wide range of continued technical support and product expertise around the globe. Our Cleco Care Global Service Centers are committed to providing data-driven customer solutions to reduce total cost of ownership and down-time on your line.

Manufacturing and delivering world-class assembly solutions for over 120 years

as Cleveland Pneumatic Tool Company in Cleveland, Ohio.

Since inception, Cleco has grown to become a global manufacturing solutions provider, headquartered in the United States, with locations across North America, Europe and Asia. As our product offerings expanded globally, we transitioned trusted and recognized brands for fixtured assembly solutions (DGD) and material removal and drilling (Master Power, Recoules Quackenbush and Dotco) to our Cleco Production Tools brand umbrella. Combining our brands enhances our extensive history as a solutions provider, while providing clarity and an improved experience for our customers.

Throughout our over 120-year history, we have provided innovative tool solutions for the following industries:

- Automotive
- Aerospace
- Appliances, Electronics & Industrial Assembly
- Agriculture & Off-Road
- Oil, Gas & Petrochemical

Using technology for industry-leading tool solutions.

Our advanced tool and assembly solutions enhance user experience and increase productivity, providing powerful results for your company. We leverage new technology to increase tool accuracy, traceability, ergonomics and safety.

Quality production tools for industry.

As a leading tool manufacturer, Cleco offers trusted tool solutions across numerous industries. Whether your company constructs high-tech automobiles, assembles planes for leading aviation projects, produces appliances or builds earth-moving equipment, you can count on Cleco Production Tools for intelligent assemblies and world-class tools.

North America

Detroit, Michigan
2630 Superior Court
Auburn Hills, MI 48236
United States
1 (248) 391-3700

Lexington, South Carolina
670 Industrial Drive
Lexington, SC 29072
United States
1 (800) 845-5629
1 (803) 951-7510

Queretaro, Mexico
Vialidad Del Pueblito 103
Parque Industrial
Querétaro, QRO 76220
Mexico
52 (442) 211 3800

Mississauga, Canada
7631 Bath Road
Mississauga L4T 3T1
Canada
(866) 691-6212

South America

Sao Paulo, Brazil
Avenida Liberdade 4055
Iporanga-Sorocaba
Sao Paolo 18087-170
Brazil
55 15 3238 3870

Europe

Piccadilly, England
C/O Spline Guages
Piccadilly, Tamworth
Staffordshire B78 2ER
United Kingdom
44 1827 8727 71

Ozoir-La-Ferriere, France
25 Avenue Maurice Chevalier
Ozoir-La-Ferriere Cedex
77330
France
33 1 64 43 22 00

Westhausen, Germany
Industriestraße 1
73463 Westhausen
Germany
49 (0) 73 63 81 0

Asia Pacific

Shanghai, China
No. 177 Bibo Road
201, Area C
Pu Dong New Area, Shanghai
China 201203 P.R.C.
86 21 60880320

Albury, Australia
519 Nurigong Street, Albury
NSW 2640
Australia
61 2 6058 0300

Pune, India
Gala No. 1, Plot No. 5 S. No. 234, 235 & 245
Indialand Global Industrial
Taluka-Mulsi, Phase I
Hinjawadi, Pune 411057
Maharashtra
India
91 020 66761111

Tokyo, Japan
Korin-Kaikan 5F
3-6-23 Shibakoen
Minato-Ku, Tokyo 105-0011
Japan
81-3-6450-1840

Seoul, Korea
#1503, Hibrand Living Bldg.
215 Yangjae-dong
Seocho-gu, Seoul 137-924
Korea
82-2-2155-0250

Cleco®
Production Tools

The Assembly Line is your blank canvas

Cleco CellCore cordless assembly tools: Easy to handle. Hard to break.

With greater intelligence and improved digital technology, CellCore is the smartest tool for the toughest enviroment:

- Connect up to 10 cordless tools to one mPro200 Controller
- Color Worklight on the tool for secondary okay/not okay visual feedback
- “Stay Alive” function prevents reboot during battery change, gaining time and efficiency
- Forward and backwards compatibility with Cleco’s entire Global Controller and Cordless platforms

Count on when mobility is essential.

Cleco cordless assembly tools are designed for maximum mobility. Cleco offers the ability to run up to 16 cordless assembly tools from one global controller, a savings of up to 50% over traditional systems. Cleco Cordless nutrunners have been designed to provide wireless connectivity in manufacturing environments. The flexibility of a wireless tool in safety critical applications can greatly improve operator productivity.

The smartest tool for the

The new CellCore™ cordless assembly tools are smart, durable and designed to withstand the toughest environments. The lightweight ergonomic design reduces operator fatigue while delivering state-of-the-art power, weight and balance. A large user interface makes it quick and easy to program rundowns on the tool without a controller. CellCore puts you in control with cordless assembly tools that are easy to handle, and hard to break.

Cleco's LiveWire™ 2 tools are

LiveWire™ 2 tools perform up to 1700 rundowns on a single battery charge and can run up to 500,000 cycles between maintenance. The second generation of LiveWire 2 tools is lighter than the original, has a compact design, and still maintains the same operator-friendly interface and precision performance you've come to know from Cleco.

CellCore - Cordless Electric - Pistol

Assembly line tough, designed for Quality Critical Applications and programming on the tool

- Durable - Assembly line tough (Drop tested up to 5 feet)
- Reliable - Increases uptime with 500k cycles between maintenance
- Ergonomic - Reduces operator fatigue while delivering state-of-the-art power and intelligence
- Easy to Use - Large user interface allows easy on-the-tool programming without a controller

MODEL	TORQUE RANGE				FREE SPEED	WEIGHT		LENGTH	SIDE TO CENTER	OUTPUT DRIVE
	MIN NM	MAX NM	MIN FT LB	MAX FT LB	R/MIN	LB	KG	IN	IN	
CCBPW04Q	1.2	4	0.9	2.9	2480	2.16	0.98	7.27	1.14	1/4" QUICK CHANGE
CCBPW123	3.6	12	2.7	8.8	800	2.32	1.05	7.79	1.14	3/8" SQUARE DRIVE
CCBPW12Q	3.6	12	2.7	8.8	800	2.32	1.05	7.89	1.14	1/4" QUICK CHANGE
CCBPW223	6.6	22	4.9	16.2	430	2.32	1.05	7.79	1.14	3/8" SQUARE DRIVE
CCBPW22Q	6.6	22	4.9	16.2	430	2.32	1.05	7.89	1.14	1/4" QUICK CHANGE

Values do not include battery.
2ah Battery weighs 0.43kg.
5ah Battery weighs 0.72kg.

CellCore - Cordless Electric - Right Angle

Assembly line tough, designed for Quality Critical Applications and programming on the tool

- Durable - Assembly line tough (Drop tested up to 5 feet)
- Reliable - Increases uptime with 500k cycles between maintenance
- Ergonomic - Reduces operator fatigue while delivering state-of-the-art power and intelligence
- Easy to Use - Large user interface allows easy on-the-tool programming without a controller

MODEL	TORQUE RANGE				FREE SPEED	WEIGHT		LENGTH	SIDE TO CENTER	OUTPUT DRIVE
	MIN NM	MAX NM	MIN FT LB	MAX FT LB	R/MIN	LB	KG	IN	IN	
CCBAW153	4.5	15	3.3	11.0	570	3.75	1.70	17.95	1.25	3/8" SQUARE DRIVE
CCBAW253	7.5	25	5.5	18.4	305	3.75	1.70	17.95	1.25	3/8" SQUARE DRIVE
CCBAW353	10.5	35	7.7	25.8	255	4.30	1.95	19.15	1.25	3/8" SQUARE DRIVE
CCBAW503	15	50	11.1	36.8	165	4.41	2.00	19.65	1.25	3/8" SQUARE DRIVE

Values do not include battery.
2ah Battery weighs 0.43kg.
5ah Battery weighs 0.72kg.

CellCore Accessories

Batteries and Chargers for CellCore

- Fast - Charge 2.0 Ah batteries within 30 minutes with the rapid charge
- Versatile - Select a 2.0 Ah battery for best ergonomics or 5.0 Ah battery for best rundowns per charge

MODEL	DESCRIPTION
T50-1000497	18V, 2.0AH BATTERY (.43KG/.94LB)
T50-1000498	18V, 5.0AH BATTERY (.72KG/1.60LB)
T50-1000499	18V RAPID CHARGER (110V NA)
T50-1000500	18V 6-BAY SEQUENTIAL CHARGER (110V NA)

LiveWire 2 - 17 Series - Cordless Electric - Pistol

Lightweight pistol tool designed for safety critical applications

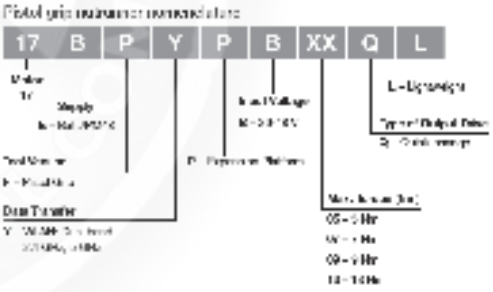

- Accurate - Designed for safety critical applications with a CM/CMK of 2.0 at +/- 7% accuracy
- Economical - Save money, time and space by pairing up to 16 tools to just one Mpro Controller
- Ergonomic - Reduce operator fatigue with lighter, ergonomic tools
- Reliable - Increase uptime with 500k cycles between maintenance periods
- Interchangeable - Decrease downtime by swapping tools quickly on the assembly line with the LiveWire memory chip

MODEL	TORQUE RANGE				FREE SPEED		LENGTH	WEIGHT		OUTPUT DRIVE
	MIN NM	MAX NM	MIN FT LB	MAX FT LB	R/MIN (26V)	R/MIN (44V)	IN (26V)	LB	KG	
17BPYPB05QL	3.0	5.0	2.2	3.7	1639	2428	8.4	2.8	1.26	1/4" QUICK CHANGE
17BPYPB07QL	3.0	7.0	2.2	5.2	1161	1721	8.4	2.77	1.26	1/4" QUICK CHANGE
17BPYPB09QL	3.0	9.0	2.2	6.6	887	1314	8.4	2.8	1.26	1/4" QUICK CHANGE
17BPYPB13QL	3.0	13.0	2.2	9.6	629	931	8.4	2.77	1.26	1/4" QUICK CHANGE

General: All tools must be used with an approved Cleco tightening controller or suitable PC software. Battery weights: 26 V Li-Ion 1.1lbs. (0.50kg), 44 V Li-Ion 1.9 lbs. (0.85kg). The 44 V battery is 19mm/.705" shorter than the 26V battery. Extra Equipment: Scanner, sockets, batteries, and chargers must be ordered separately.

LiveWire 2 - 47 Series - Cordless Electric - Right Angle

Lightweight Right angle tool designed for safety critical applications

- Accurate - Designed for safety critical applications with a CM/CMK of 2.0 at +/- 7% accuracy
- Economical - Save money, time and space by pairing up to 16 tools to just one Mpro Controller
- Ergonomic - Reduce operator fatigue with lighter, ergonomic tools
- Reliable - Increase uptime with 500k cycles between maintenance periods
- Interchangeable - Decrease downtime by swapping tools quickly on the assembly line with the LiveWire memory chip

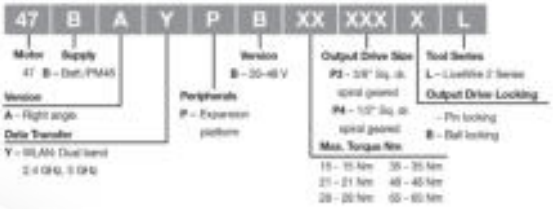

MODEL	TORQUE RANGE				FREE SPEED		LENGTH	WEIGHT		OUTPUT DRIVE
	MIN NM	MAX NM	MIN FT LB	MAX FT LB	R/MIN (26V)	R/MIN (44V)	IN (26V)	LB	KG	
47BAYPB15P3L	5.5	15	4.06	11.1	487	891	22.9	4.03	1.83	3/8" SQUARE DRIVE
47BAYPB21P3L	8	15	5.9	15.5	370	680	22.9	4.03	1.83	3/8" SQUARE DRIVE
47BAYPB28P3L	10	28	7.4	20.7	264	482	22.9	4.03	1.83	3/8" SQUARE DRIVE
47BAYPB35P3L	12	35	8.9	25.8	255	446	23.0	4.14	1.88	3/8" SQUARE DRIVE
47BAYPB48P3L	18	48	13.3	35.4	181	316	23.5	4.34	1.97	3/8" SQUARE DRIVE
47BAYPB65P4L	15	65	11.1	47.9	135	236	23.54	4.56	2.07	3/8" SQUARE DRIVE

General: All tools must be used with an approved Cleco tightening controller or suitable PC software. Battery weights: 26 V Li-Ion 1.1lbs. (0.50kg), 44 V Li-Ion 1.9 lbs. (0.85kg). The 44 V battery is 19mm/.705" shorter than the 26V battery. Extra Equipment: Scanner, sockets, batteries, and chargers must be ordered separately.

LiveWire - 47 Series - Cordless Electric - Inline

Inline tool designed for safety critical applications

- Accurate - Designed for safety critical applications with a CM/CMK of 2.0 at +/- 7% accuracy
- Economical - Save money, time and space by pairing up to 16 tools to just one Mpro Controller
- Reliable - Increase uptime with 500k cycles between maintenance periods
- Interchangeable - Decrease downtime by swapping tools quickly on the assembly line with the LiveWire memory chip

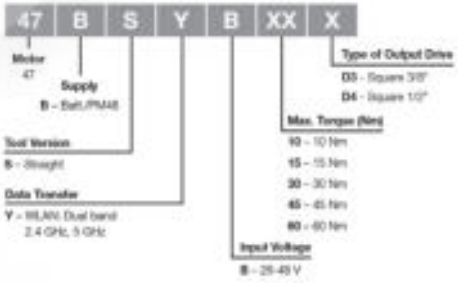

MODEL	TORQUE RANGE				FREE SPEED		LENGTH	WEIGHT		OUTPUT DRIVE
	MIN NM	MAX NM	MIN FT LB	MAX FT LB	R/MIN (26V)	R/MIN (44V)	IN (26V)	LB	KG	
47BSYB10D3	3	10	2.2	8.1	750	1375	20.3	3.9	1.8	3/8" SQUARE DRIVE
47BSYB15D3	5	15	3.6	11.8	570	1050	20.5	3.9	1.8	3/8" SQUARE DRIVE
47BSYB30D3	10	30	7.3	23.6	275	485	20.7	3.9	1.8	3/8" SQUARE DRIVE
47BSYB45D3	15	45	11	33.1	205	355	23.2	5.9	2.7	3/8" SQUARE DRIVE
47BSYB60D4	21	60	15.4	44.2	145	250	23.3	6.1	2.8	1/2" SQUARE DRIVE

General: All tools must be used with an approved Cleco tightening controller or suitable PC software. Battery weights: 26 V Li-Ion 1.1lbs. (0.50kg), 44 V Li-Ion 1.9 lbs. (0.85kg). The 44 V battery is 19mm/.705" shorter than the 26V battery. Extra Equipment: Scanner, sockets, batteries, and chargers must be ordered separately.

LiveWire - 47 Series - Cordless Electric - Crowfoot

Crowfoot tool designed for hard to reach, safety critical applications

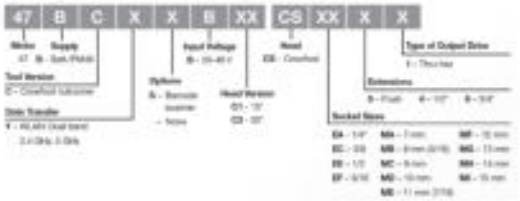

- Accurate - Designed for safety critical applications
- Economical - Save money, time and space by pairing up to 16 tools to just one Mpro Controller
- Reliable - Increase uptime with 500k cycles between maintenance periods
- Interchangeable - Decrease downtime by swapping tools quickly on the assembly line with the LiveWire memory chip

MODEL	TORQUE RANGE				FREE SPEED		LENGTH	WEIGHT	
	MIN NM	MAX NM	MIN FT LB	MAX FT LB	R/MIN (26V)	R/MIN (44V)	IN (26V)	LB	KG
47BCYSB30C1	10.5	30	7.7	22.1	186	186	26.3	6.1	2.78
47BCYSB30C3	10.5	30	7.7	22.1	326	326	26.0	6.1	2.78

General: All tools must be used with an approved Cleco tightening controller or suitable PC software. Battery weights: 26 V Li-Ion 1.1lbs. (0.50kg), 44 V Li-Ion 1.9 lbs. (0.85kg). The 44 V battery is 19mm/.705" shorter than the 26V battery. Extra Equipment: Scanner, sockets, batteries, and chargers must be ordered separately.

High Torque LiveWire - 47 Series - Cordless Electric - Right Angle - Nutrunner

Right angle tool designed for safety critical applications

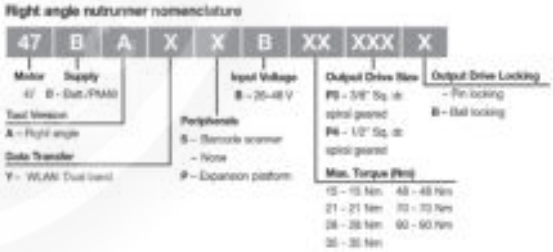

- Accurate - Designed for safety critical applications with a CM/CMK of 2.0 at +/- 7% accuracy
- Economical - Save money, time and space by pairing up to 16 tools to just one Mpro Controller
- Reliable - Increase uptime with 500k cycles between maintenance periods
- Interchangeable - Decrease downtime by swapping tools quickly on the assembly line with the LiveWire memory chip

MODEL	TORQUE RANGE				FREE SPEED		LENGTH	WEIGHT		OUTPUT DRIVE
	MIN NM	MAX NM	MIN FT LB	MAX FT LB	R/MIN (26V)	R/MIN (44V)	IN (26V)	LB	KG	
47BAYPB70P4	24	70	17.7	51.7	123	216	27.2	9.2	4.18	1/2 SQUARE DRIVE
47BAYPB90P4	40	90	29.5	66.4	80	140	27.2	9.2	4.18	1/2" SQUARE DRIVE

General: All tools must be used with an approved Cleco tightening controller or suitable PC software. Battery weights: 26 V Li-Ion 1.1lbs. (0.50kg), 44 V Li-Ion 1.9 lbs. (0.85kg). The 44 V battery is 19mm/.705" shorter than the 26V battery. Extra Equipment: Scanner, sockets, batteries, and chargers must be ordered separately.

LiveWire - 47 Series - Cordless Electric - Tubenut

Tubenut tool designed for safety critical applications such as brake line fittings and fuel line assembly

- Accurate - Designed for safety critical applications
- Economical - Save money, time and space by pairing up to 16 tools to just one Mpro Controller
- Reliable - Increase uptime with 500k cycles between maintenance periods
- Interchangeable - Decrease downtime by swapping tools quickly on the assembly line with the LiveWire memory chip

MODEL	TORQUE RANGE				FREE SPEED		LENGTH	WEIGHT	
	MIN NM	MAX NM	MIN FT LB	MAX FT LB	R/MIN (26V)	R/MIN (44V)	IN (26V)	LB	KG
47BTYSB20T2	10	20	7.4	14.8	260	455	23.6	5.6	2.54
47BTYSB30T3	15	30	11.1	22.1	188	329	23.3	5.6	2.54
47BTYSB40T4	20	40	14.8	29.5	141	247	29.9	6.4	2.90

General: All tools must be used with an approved Cleco tightening controller or suitable PC software. Battery weights: 26 V Li-Ion 1.1lbs. (0.50kg), 44 V Li-Ion 1.9 lbs. (0.85kg). The 44 V battery is 19mm/.705" shorter than the 26V battery. Extra Equipment: Scanner, sockets, batteries, and chargers must be ordered separately.

Barcode Scanner for Platform & LiveWire 2 Tools

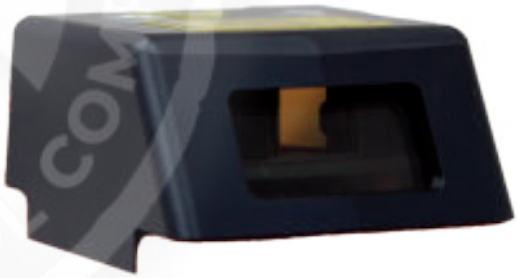

- Traceability - Link your rundown results to a serial number or VIN directly from the tool
- Compact - Eliminate external barcode scanners on the line

MODEL	DESCRIPTION
937240PT	BARCODE SCANNER CLASS 2 FOR LIVEWIRE 2 AND PLATFORM TOOLS
943045PT	2-D LED LIGHTBAR, GREEN, IEC 60825: CLASS 2
962034PT	2-D LASER CROSSHAIR, IEC 60825: CLASS 2

Gryroscope for Platform & LiveWire 2 Tools

- Accurate - Eliminate operator influence and improve your CP/CPK by using an added gyroscope on the tool
- Compact - Gyroscope module is added directly to the top of the tool in a small package

MODEL	DESCRIPTION
942039PT	GYROSCOPE MODULE FOR LIVEWIRE 2 AND PLATFORM TOOLS

LiveWire 44V Li-ion Battery

- Up to 83% faster vs. 26 V battery
- Up to 1700 rundowns per charge (hard joint)
- Life greater than 800 charging cycles
- On-board intelligence
- LCD Display indicating battery charge level and total charge cycles
- Single tab, one-hand removal

MODEL	DESCRIPTION	WEIGHT	
		LB	KG
936400PT	44 V LI-ION	1.87	0.85

LiveWire 26V Li-ion Battery

- Life greater than 800 charging cycles
- Compact battery solution for LiveWire tools

MODEL	DESCRIPTION	WEIGHT	
		LB	KG
935377	26 V LI-ION	1.1	0.5

LiveWire Battery Chargers

- Battery charger for 26V, 44V and dual charger
- Dual charger auto sensing 26V/44V technology
- 1 hour charge time
- Power and status LEDs

MODEL	DESCRIPTION
935302	26 V 4 UNIT CHARGING STATION (230 VAC ONLY)
935382	26 V BATTERY CHARGER (UK)
935391	26 V BATTERY CHARGER
936491PT	26 V/44 V BATTERY CHARGER

Vmax PM48/PM48-LAN Power Module

- Provides a constant power source with speeds matching that of the 44 V battery
- Auto sensing input - (85 - 275 VAC)
- Power and status LEDs
- Electronic circuit protection

MODEL	WEIGHT		WIDTH		DEPTH		LENGTH	
	LB	KG	IN	MM	IN	MM	IN	MM
961350PT	6.8	3.1	9.4	240	5.9	150	4.7	120

Vmax Tool Cable

- Have constant power for your cordless tool
- Still connect up to 16 tools to one controller

MODEL	LENGTH	LENGTH
	FT	M
961341-030	9.8	3
961341-060	19.7	6
961341-080	26.2	8
961341-100	32.8	10
961369-060	19.7	6

2.4-5GHz Dual Band Access Point - NA

LiveWire Dual Band Access Points

- Industrial access point with up to 300 mbps speed on both 2.4 and 5.0 GHz
- Dual band allows great flexibility in a plant

MODEL	DESCRIPTION
544249PT	WLAN DUAL BAND 2.4/5GHZ (US)
961390	XBEE 802.15.4 BASE STATION

Radio Range: 30-50 meters (XBEE 30 meters max.) IEEE 802.11 a/b/g (depending on tool) Max Tools: 16 (Contact Regional Support Center for requirements greater than 10)

Protective Tool Covers

- Scratch and impact covers protect your tool and your workpiece

MODEL	DESCRIPTION
936424PT	PROTECTIVE COVERS FOR SCANNER ON 47BA TOOLS (NOT SUITABLE FOR LIVEWIRE 2 TOOLS)
936489PT	PROTECTIVE COVERS FOR LIVEWIRE PISTOL GRIP TOOLS 17BP.. - BLACK
937210PT	PROTECTIVE COVERS FOR DISPLAY ON 47BA TOOLS (NOT SUITABLE FOR LIVEWIRE 2 TOOLS)
937704PT	PROTECTIVE COVERS FOR RIGHT ANGLE TOOL 47BA..15-28 NM, P3+P3L (ALSO SUITABLE FOR LIVEWIRE 2 TOOLS)
937706PT	PROTECTIVE COVERS FOR RIGHT ANGLE TOOL 47BA..35 NM, P3+P3L (ALSO SUITABLE FOR LIVEWIRE 2 TOOLS)
937708PT	PROTECTIVE COVERS FOR RIGHT ANGLE TOOL 47BA..48 NM, P3+P3L (ALSO SUITABLE FOR LIVEWIRE 2 TOOLS)
937711PT	PROTECTIVE COVERS FOR RIGHT ANGLE TOOL 47BA..70 NM/90 NM P4

Protective Tool Covers - EU

- Scratch and impact covers protect your tool and your workpiece

MODEL	DESCRIPTION
936382	PROTECTIVE COVER FOR TOOL MODEL 18E...AL2
936383	PROTECTIVE COVER FOR TOOL MODEL 18E...AM3
936384	PROTECTIVE COVER FOR TOOL MODEL 48E...AH4
936385PT	PROTECTIVE COVER FOR TOOL MODEL 48E...MH4
936386PT	PROTECTIVE COVER FOR TOOL MODEL 48E...AX6
936387	PROTECTIVE COVER FOR TOOL MODEL 48E...AM3

LiveWire Tool Holders & Controller Pairing Cords

- Tool holders with and without IRDA controller pairing devices built in

MODEL	DESCRIPTION
935144	TOOL HOLDER FOR PISTOL GRIP TOOLS INCL. IRDA
935170	INFRARED INTERFACE WITH CABLE
935290	TOOL HOLDER FOR RIGHT ANGLE TOOLS UP TO 50 NM INCL. IRDA
935395	TOOL HOLDER FOR RIGHT ANGLE TOOLS UP TO 50 NM
935396	TOOL HOLDER FOR PISTOL GRIP TOOLS
935998	TOOL HOLDER FOR RIGHT ANGLE TOOLS FROM 70 NM
935999	TOOL HOLDER FOR RIGHT ANGLE TOOLS FROM 70 NM INCL. IRDA

Tightening solutions for every application

Cleco NeoTek - 1 million accurate, repeatable, maintenance free cycles.

Engineered to last also means engineered to perform. Precision-hardened and ground spiral cut bevel and pinion gears equals zero preventative maintenance for 1 million cycles.

By providing class-leading repeatability of 2.0 Cm/Cmk @ +\- 7%, NeoTek™ is not only maintenance free, but worry free. The 1,000,000th rundown will be as secure as the first.

Cleco Corded Electric Nutrunners - the next generation of smart tool solutions.

Our corded electric assembly tools offer increased productivity, improved quality, and reduced downtime with real-time, data drive results for those assembly applications in which safety is critical.

for quality critical applications.

Cleco 30-70 series corded assembly tools are driven by a maintenance-free brushless motor. This motor technology coupled with our high-resolution resolved offers full range control for safety critical joints. The 30-70 series tools offer industry-proven gear trains for outstanding, durable performance.

Cleco 30-70 series nutrunners provide a unique modular assembly design for easy of repair. The on-board intelligent memory chip records tool set-up values and counts cycles for maintenance scheduling to prevent costly production downtime.

Workstation control with

The Cleco Hybrid Controller features a large touchscreen with an intuitive software interface that supports industry standard protocols, fieldbus communication, and the ability to manage up to 16 tools, cordless and corded*.

Programming can be done directly from the controller or via a remote network connection, and the configurable architecture allows easy integration with your MES system.

Cost effectiveness is increased by simplifying system installation and decreasing complex process modifications.

NeoTek - 30 Series - Corded Electric - Transducer Control - Pistol (0.9-26 Nm)

Ergonomic grip and light weight reduces operator fatigue to increase productivity.

- 1 Million Cycles Maintenance Free
- Repeatability & Accuracy with 2.0 Cm/Cmk at +/- 7%
- Configurable LED light rings
- Tactile & Audible Operator Feedback
- Programmable Multi-function Buttons

MODEL	TORQUE RANGE				FREE SPEED	WEIGHT		LENGTH	SIDE TO CENTER	OUTPUT DRIVE
	MIN NM	MAX NM	MIN FT LB	MAX FT LB	R/MIN	LB	KG	IN	IN	
30EPN05BD2	0.9	4.7	0.66	3.47	4275	2.05	0.93	7.76	0.64	1/4" SQ.
30EPN05BDQ	0.9	4.7	0.66	3.47	4275	2.01	0.91	8.27	0.64	1/4" QC
30EPN12EAQ	3.9	11.6	2.88	8.56	1650	2.20	1.00	9.02	0.64	1/4" QC
30EPN12FA3	3.9	11.6	2.88	8.56	1650	2.16	0.98	8.43	0.64	3/8" SQ.
30EPN19FB3	3.9	19.0	2.88	14.01	1000	2.20	1.00	8.43	0.64	3/8" SQ.
30EPN26FB3	5.1	26.0	3.76	19.18	750	2.20	1.00	8.43	0.64	3/8" SQ.

NeoTek - 50 Series - Corded Electric - Transducer Control - Pistol (5.6-123 Nm)

Ergonomic grip and spline mount ideal for applications up to 123 Nm.

- 1 Million Cycles Maintenance Free
- Repeatability & Accuracy with 2.0 Cm/Cmk at +/- 7%
- Configurable LED light rings
- Tactile & Audible Operator Feedback
- Programmable Multi-function Buttons

MODEL	TORQUE RANGE				FREE SPEED	WEIGHT		LENGTH	SIDE TO CENTER	OUTPUT DRIVE
	MIN NM	MAX NM	MIN FT LB	MAX FT LB	R/MIN	LB	KG	IN	IN	
50EPN28FD3	5.6	28.0	4.13	20.65	2125	3.48	1.58	10.08	0.64	3/8" SQ.
50EPN43GD3	9.0	43.0	6.64	31.72	1375	3.64	1.65	10.24	0.74	3/8" SQ.
50EPN65HD4	14.0	66.0	10.33	48.68	900	4.72	2.14	11.34	0.87	1/2" SQ.
50EPN85JD4	17.0	84.0	12.54	61.96	670	4.89	2.22	11.89	0.87	1/2" SQ.
50EPN125KD4	25.0	123.0	18.44	90.72	455	5.78	2.62	12.32	1.10	1/2" SQ.

NeoTek - 30 Series - Corded Electric - Transducer Control - Right Angle (1.3-28 Nm)

1 million cycles maintenance free and customizable features to fit any application. Light weight and ergonomic design for applications up to 28 Nm.

- Engineered to provide 1 million cycles maintenance-free
- Repeatability & accuracy of 2.0 Cm/Cmk at +/- 7%
- 1.3 Nm to 28 Nm Torque range
- 3/8 square output drive
- Configurable LED light rings

MODEL	TORQUE RANGE				FREE SPEED	WEIGHT		LENGTH	SIDE TO CENTER	HEAD HEIGHT	OUTPUT DRIVE
	MIN NM	MAX NM	MIN FT LB	MAX FT LB	R/MIN	LB	KG	IN	IN	IN	
30EAN06EA3	1.3	6	.9	4.4	2925	2.5	1.13	14.96	.48	1.42	3/8" SQ.
30EAN12EA3	2.6	12	1.9	8.8	1450	2.5	1.14	14.96	.48	1.42	3/8" SQ.
30EAN21FA3	4.4	21	3.2	15.4	835	2.9	1.32	16.06	.65	1.58	3/8" SQ.
30EAN28FA3	5.7	28	4.2	20.6	615	2.9	1.32	16.06	.65	1.58	3/8" SQ.

NeoTek - 50 Series - Corded Electric - Transducer Control - Right Angle (6-205 Nm)

1 million cycles maintenance free and customizable features to fit any application. High speed and accuracy for applications up to 205 Nm.

- Engineered to provide 1 million cycles maintenance-free
- Repeatability & accuracy of 2.0 Cm/Cmk at +/- 7%
- 6.0 Nm to 205 Nm Torque range
- 3/8, 1/2, 3/4 square output drive
- Configurable LED light rings

MODEL	TORQUE RANGE				FREE SPEED	WEIGHT		LENGTH	SIDE TO CENTER	HEAD HEIGHT	OUTPUT DRIVE
	MIN NM	MAX NM	MIN FT LB	MAX FT LB	R/MIN	LB	KG	IN	IN	IN	
50EAN30FA3	6.0	30	4.4	22.1	1765	3.5	1.60	17.68	.65	1.58	3/8" SQ.
50EAN39GA3	8.0	39	5.9	28.7	1375	3.9	1.77	18.19	.66	1.76	3/8" SQ.
50EAN59HA3	12	59	8.8	43.5	915	4.3	1.94	18.27	.75	2.02	3/8" SQ.
50EAN80JA4	16	80	11.8	59.0	670	4.8	2.17	18.62	.90	1.91	1/2" SQ.
50EAN110KA4	22	109	16.2	80.3	475	6.5	2.76	19.41	1.00	2.37	1/2" SC
50EAN150KB4	32	150	23.6	110.6	320	8.3	3.75	22.01	1.03	2.54	1/2" SQ.
50EAN205NA6	41	205	30.2	151.2	250	8.7	3.93	22.13	1.16	2.44	3/4" SQ.

NeoTek - 70 Series - Corded Electric - Transducer Control - Right Angle (39-350 Nm)

Durability and unsurpassed RPM for high torque applications up to 350 Nm.

- Repeatability & Accuracy with 2.0 Cm/Cmk at +/- 7%
- Configurable LED light rings
- Tactile & Audible Operator Feedback
- Programmable Multi-function Buttons

MODEL	TORQUE RANGE				FREE SPEED	WEIGHT		LENGTH	SIDE TO CENTER	OUTPUT DRIVE
	MIN NM	MAX NM	MIN FT LB	MAX FT LB	R/MIN	LB	KG	IN	IN	
70EAN155NA6	39.0	156.0	28.76	115.06	740	14.33	6.50	25.07	1.16	3/4" SQ.
70EAN205NA6	52.0	205.0	38.35	151.20	555	14.33	6.50	25.07	1.16	3/4" SQ.
70EAN240PA6	60.0	239.0	44.25	176.28	480	15.43	7.00	25.78	1.49	3/4" SQ.
70EAN350PA6	88.0	350.0	64.91	258.15	325	15.43	7.00	25.78	1.49	3/4" SQ.

Note: 70 Series Tools require a 220/230 power supply to the controller

NeoTek - 30 Series - Corded Electric - Transducer Control - Inline (0.9-26 Nm)

High speed and accuracy for applications up to 26 Nm. Mounts easily with machined splines and locknut.

- 1 Million Cycles Maintenance Free
- Repeatability & Accuracy with 2.0 Cm/Cmk at +/- 7%
- Configurable LED light rings
- Tactile & Audible Operator Feedback
- Programmable Multi-function Buttons

MODEL	TORQUE RANGE				FREE SPEED	WEIGHT		LENGTH	SIDE TO CENTER	OUTPUT DRIVE
	MIN NM	MAX NM	MIN FT LB	MAX FT LB	R/MIN	LB	KG	IN	IN	
30ESN05BD2	0.9	4.7	0.66	3.47	4275	2.12	0.96	13.27	0.64	1/4" SQ.
30ESN05BDQ	0.9	4.7	0.66	3.47	4275	2.12	0.96	13.46	0.64	1/4" QC
30ESN12EAQ	3.9	11.6	2.88	8.56	1650	2.34	1.06	14.21	0.64	1/4" QC
30ESN12FA3	3.9	11.6	2.88	8.56	1650	2.34	1.06	14.05	0.64	3/8" SQ.
30ESN19FB3	3.9	19.0	2.88	14.01	1000	2.34	1.06	14.05	0.64	3/8" SQ.
30ESN26FC3	5.1	26.0	3.76	19.18	750	2.34	1.06	14.05	0.64	3/8" SQ.

NeoTek - 50 Series - Corded Electric - Transducer Control - Inline (5.6-84 Nm)

High speed and accuracy for applications up to 123 Nm. Mounts easily with machined splines and locknut.

- 1 Million Cycles Maintenance Free
- Repeatability & Accuracy with 2.0 Cm/Cmk at +/- 7%
- Configurable LED light rings
- Tactile & Audible Operator Feedback
- Programmable Multi-function Buttons

MODEL	TORQUE RANGE				FREE SPEED	WEIGHT		LENGTH	SIDE TO CENTER	OUTPUT DRIVE
	MIN NM	MAX NM	MIN FT LB	MAX FT LB	R/MIN	LB	KG	IN	IN	
50ESN28FD3	5.6	28.0	4.13	20.65	2125	2.98	1.35	15.70	0.64	3/8" SQ.
50ESN43GD3	9.0	43.0	6.64	31.72	1375	3.64	1.65	15.86	0.74	3/8" SQ.
50ESN65HD4	14.0	66.0	10.33	48.68	900	4.19	1.90	17.12	0.86	1/2" SQ.
50ESN85JD4	17.0	84.0	12.54	61.96	670	4.41	2.00	17.67	0.86	1/2" SQ.
50ESN125KD4	25.0	123.0	18.44	90.72	455	5.29	2.40	18.11	1.10	1/2" SQ.

NeoTek - 70 Series - Corded Electric - Transducer Control - Inline (23-850 Nm)

Durability and unsurpassed RPM for high torque applications up to 850 Nm.

- Repeatability & Accuracy with 2.0 Cm/Cmk at +/- 7%
- Configurable LED light rings
- Tactile & Audible Operator Feedback
- Programmable Multi-function Buttons

MODEL	TORQUE RANGE				FREE SPEED	WEIGHT		LENGTH	SIDE TO CENTER	OUTPUT DRIVE
	MIN NM	MAX NM	MIN FT LB	MAX FT LB	R/MIN	LB	KG	IN	IN	
70ESN95ND6	23.0	93.0	16.96	68.59	1325	11.46	5.20	22.28	1.30	3/4" SQ.
70ESN130ND6	31.0	124.0	22.86	91.46	1000	11.46	5.20	22.28	1.30	3/4" SQ.
70ESN185ND6	46.0	184.0	33.9	135.7	680	11.46	5.20	22.28	1.30	3/4" SQ.
70ESN245ND6	61	245.0	45.73	180.70	510	11.46	5.20	22.28	1.30	3/4" SQ.
70ESN355SD8	89.0	354.0	65.6	261.0	335	16.76	7.60	24.01	1.49	1" SQ.
70ESN475SD8	118.0	473.0	87.03	348.87	250	16.76	7.60	24.01	1.49	1" SQ.
70ESN700SD8	175.0	700.0	129.07	516.29	170	16.76	7.60	24.01	1.49	1" SQ.
70ESN850SD8	213.0	850.0	157.10	626.93	125	16.76	7.60	24.01	1.49	1" SQ.

Note: 70 Series Tools require a 220/230 power supply to the controller

NeoTek - 30 Series - Corded Electric - Transducer Control - Retractable Spindle (2.6-30 Nm)

- For fixtured applications to ensure bolt engagement
- Configurable LED light rings
- Programmable multi-function buttons
- Brushless Motor
- Transducer Control

MODEL	TORQUE RANGE				FREE SPEED	WEIGHT		LENGTH	SIDE TO CENTER	OUTPUT DRIVE
	MIN NM	MAX NM	MIN FT LB	MAX FT LB	R/MIN	LB	KG	IN	IN	
30EAR12S131	2.6	12.1	1.9	8.9	1425	3.61	1.64	16.2	0.54	3/8" SQ.
30EAR25S131	5.4	25.0	4.0	18.4	675	4.01	1.82	16.2	0.54	3/8" SQ.
30EAR30S131	7.0	30.0	5.2	22.1	500	4.01	1.82	16.2	0.54	3/8" SQ.

NeoTek - 50 Series - Corded Electric - Transducer Control - Retractable Spindle (8-235 Nm)

- For fixtured applications to ensure bolt engagement
- Configurable LED light rings
- Programmable multi-function buttons
- Brushless Motor
- Transducer Control

MODEL	TORQUE RANGE				FREE SPEED	WEIGHT		LENGTH	SIDE TO CENTER	OUTPUT DRIVE
	MIN NM	MAX NM	MIN FT LB	MAX FT LB	R/MIN	LB	KG	IN	IN	
50EAR39S231	8.0	39.0	5.9	28.8	1375	5.00	2.20	19.0	0.69	3/8" SQ.
50EAR55S231	12.0	55.0	8.9	40.6	915	5.38	2.37	19.0	0.69	3/8" SQ.
50EAR56S341	11.0	56.0	8.1	41.3	965	5.60	2.51	20.2	0.67	1/2" SQ.
50EAR85S341	17.0	84.0	12.5	62.0	640	5.98	2.68	20.2	0.87	1/2" SQ.
50EAR100S341	20.0	100.0	14.8	73.8	540	6.48	2.91	20.2	0.87	1/2" SQ.
50EAR165S461	33.0	165.0	24.3	121.7	315	7.68	6.81	21.7	1.06	3/4" SQ.
50EAR235S461	49.0	235.0	36.1	173.3	215	8.67	8.46	22.3	1.06	3/4" SQ.

NeoTek - 30 Series - Corded Electric - Transducer Control - Flush Socket (2.6-30 Nm)

- For low clearance applications
- Configurable LED light rings
- Programmable multi-function buttons
- Brushless Motor
- Transducer Control

MODEL	TORQUE RANGE				FREE SPEED	WEIGHT		LENGTH	SIDE TO CENTER
	MIN NM	MAX NM	MIN FT LB	MAX FT LB	R/MIN	LB	KG	IN	IN
30EFN12F1	2.6	12.1	1.9	8.9	1425	3.61	1.64	16.2	0.54
30EFN25F1	5.4	25.0	4.0	18.4	675	4.01	1.82	16.2	0.54
30EFN30F1	8.0	30.0	5.9	22.1	500	4.01	1.82	16.2	0.54

NeoTek - 50 Series - Corded Electric - Transducer Control - Flush Socket (8-235 Nm)

- For low clearance applications
- Configurable LED light rings
- Programmable multi-function buttons
- Brushless Motor
- Transducer Control

MODEL	TORQUE RANGE				FREE SPEED	WEIGHT		LENGTH	SIDE TO CENTER
	MIN NM	MAX NM	MIN FT LB	MAX FT LB	R/MIN	LB	KG	IN	IN
50EFN39F2	8.0	39.0	5.9	28.8	1375	6.00	2.70	19.0	0.69
50EFN55F2	12.0	55.0	8.9	40.6	915	6.38	2.87	19.0	0.69
50EFN56F3	11.0	56.0	8.1	41.3	965	5.60	2.51	20.2	0.88
50EFN85F3	17.0	84.0	12.5	62.0	640	5.98	2.68	20.2	0.88
50EFN100F3	20.0	100.0	14.8	73.8	540	6.48	2.91	20.2	0.88
50EFN165F4	33.0	165.0	24.3	121.7	315	7.68	3.49	21.7	1.06
50EFN235F4	49.0	235.0	36.1	173.3	215	9.87	4.48	22.3	1.06

NeoTek - 50 Series - Corded Electric - Transducer Control - Tubenut (7.6-40 Nm)

- For fluid line applications
- Configurable LED light rings
- Programmable multi-function buttons
- Brushless Motor
- Transducer Control

MODEL	TORQUE RANGE				FREE SPEED	WEIGHT		LENGTH
	MIN NM	MAX NM	MIN FT LB	MAX FT LB	R/MIN	LB	KG	IN
50ETN20T2	7.6	20.0	5.6	14.8	1525	4.13	1.90	18.4
50ETN30T3	11.0	30.0	8.1	22.1	1100	4.23	1.90	18.0
50ETN40T4	14.0	40.0	10.3	29.5	830	5.03	2.20	19.0

NeoTek - 50 Series - Corded Electric - Transducer Control - Hold-n-Drive (11-235 Nm)

- For specialized frame and suspension applications
- Configurable LED light rings
- Programmable multi-function buttons
- Brushless Motor
- Transducer Control

MODEL	TORQUE RANGE				FREE SPEED	WEIGHT		LENGTH	SIDE TO CENTER
	MIN NM	MAX NM	MIN FT LB	MAX FT LB	R/MIN	LB	KG	IN	IN
50EHN56H	11.0	56.0	8.1	41.3	965	7.50	3.37	20.3	1.06
50EHN85H	17.0	84.0	12.5	62.0	640	7.88	3.54	20.3	1.06
50EHN100H	20.0	100.0	14.8	73.8	540	7.08	3.20	20.3	1.06
50EHN165H	33.0	165.0	24.3	121.7	315	6.48	2.95	21.7	1.06
50EHN235H	49.0	235.0	36.1	173.3	215	8.67	3.94	22.3	1.06

NeoTek - 50 Series - Corded Electric - Transducer Control - Crowfoot (8-30 Nm)

- For hard to reach areas with limited access
- Configurable LED light rings
- Programmable multi-function buttons
- Brushless Motor
- Transducer Control

MODEL	TORQUE RANGE				FREE SPEED	WEIGHT		LENGTH	SIDE TO CENTER
	MIN NM	MAX NM	MIN FT LB	MAX FT LB	R/MIN	LB	KG	IN	IN
50ECN30C1	8.0	30.0	5.9	22.1	1150	4.73	1.90	20.7	0.63
50ECN30C3	8.0	30.0	5.9	22.1	1150	4.73	1.90	20.4	0.63

NeoTek Tool Cable

- Use to connect a 30/50/70 Series tool to an mPro400GCD-P controller.
- Designed for maximum life.
- Quarter-Turn connection.
- Ultra-tight 30mm bend radius.
- Cycle counter memory.

MODEL	DESCRIPTION	WEIGHT		LENGTH	LENGTH
		LB	KG	FT	M
961560-030	3 METER NEOTEK TOOL CABLE	1.7	0.79	9.8	3
961560-060	6 METER NEOTEK TOOL CABLE	2.7	1.23	19.7	6
961560-080	8 METER NEOTEK TOOL CABLE	3.4	1.52	26.2	8
961560-100	10 METER NEOTEK TOOL CABLE	3.9	1.81	32.8	10

Tool Cable Adaptor

- Used to connect 67 series tools as well as older 17/47 Series corded tools to an mPro400GCD controller
- Allows easy upgrade to newest controller technology

MODEL	DESCRIPTION
961789PT	Y-CABLE ADAPTER FOR 17/47/67 SERIES TOOLS

NeoTek Tool Extension Cables

- Used in applications requiring cable lengths greater than 10 meters.

MODEL	WEIGHT		LENGTH	LENGTH
	LB	KG	FT	M
961923-050	3.9	1.79	16.5	5
961923-100	7.4	3.34	32.9	10
961923-150	10.8	4.89	49.2	15
961923-200	14.2	6.44	65.6	20
961923-250	17.6	7.99	82	25

NeoTek Camera Scanner

- Scans 1D and 2D barcodes
- Scan images from paper documents as well as screens and monitors
- Camera technology eliminates traditional laser barcode scanners

MODEL	DESCRIPTION
937731PT	FOR 30/50 SERIES RIGHT ANGLE AND INLINE TOOLS
942391PT	FOR 70 SERIES RIGHT ANGLE AND INLINE TOOLS
T55-3000018	FOR 30 SERIES PISTOL TOOLS
T55-3000019	FOR 50 SERIES PISTOL TOOLS

NeoTek Tool Light

- Ultra-bright LEDs
- Fully programmable
- High, medium, and low intensity light beam

MODEL	DESCRIPTION
943462PT	FOR 30/50 SERIES RIGHT ANGLE AND INLINE TOOLS
943464PT	FOR 70 SERIES RIGHT ANGLE AND INLINE TOOLS

NeoTek Gyroscope

- Highly accurate angle monitoring.
- Compensates for operator influence during the tightening process.
- Can eliminate the need for fixturing in some applications.

MODEL	DESCRIPTION
942396PT	FOR 30/50 SERIES RIGHT ANGLE AND INLINE TOOLS
943684PT	FOR 70 SERIES RIGHT ANGLE AND INLINE TOOLS
T55-3000020	FOR 30 SERIES PISTOL
T55-3000021	FOR 50 SERIES PISTOL

NeoTek Reaction bar

- Improved operator safety
- Keeps hands away from assembly
- One hand operation

MODEL	DESCRIPTION
201034	FOR 70ESN95ND6/70ESN130ND6/70ESN185ND6/70ESN245ND6
301934PT	FOR 30ESN12EAQ/30ESN12FA3/30EPN12EAQ/30EPN12FA3
46036202	FOR 70ESN355SD8/70ESN475SD8/70ESN700SD8/700ESN850SD8
48047128	FOR 50ESN65HD4/50ESN85JD4/50ESN125KD4/50EPN65HD4/50EPN85JD4/50EPN125KD4
542127	FOR 30ESN19FB3/30ESN26FC3/50ESN28FD3/50ESN43GD3/30EPN19FB3/30EPN26FC3/50EPN28FD3/50EPN43GD3
T50-3000064	FOR 50EAN59HA3
T50-3000065	FOR 50EAN80JA4
T50-3000066	FOR 50EAN110KA4
T50-3000067	FOR 50EAN150KB4
T50-3000068	FOR 50EAN205NA6

NeoTek Suspension Bail

- For use with spring balancer
- Improved operator ergonomics

MODEL	DESCRIPTION
T50-3000048	30/50 SERIES FIXED SUSPENSION BAIL (EXCL. PISTOLS)
T50-3000060	30/50 SERIES FIXED OFFSET SUSPENSION BAIL (EXCL. PISTOLS)
T50-3000061	30/50 SERIES SWIVEL OFFSET SUSPENSION BAIL (EXCL. PISTOLS)
T50-3000063	30/50 SERIES SWIVEL SUSPENSION BAIL (EXCL. PISTOLS)

NeoTek Body Extension

- For hard to reach applications.
- Reduces reaction force to the operator.

MODEL	DESCRIPTION
T50-3000069	FOR 50EAN110KA4
T50-3000070	FOR 50EAN150KB4/50EAN205NA6
T50-3000071	FOR 50EAN80JA4
T50-3000072	FOR 50EAN59HA3

18 Series - Corded Electric - Transducer Control - Pistol (2-31 Nm)

Pistol tool for applications with torque up to 28 Nm.

- Brushless Operation
- Resolver Control
- Transducer Control
- Memory Intelligence

MODEL	TORQUE RANGE				FREE SPEED	WEIGHT		OUTPUT DRIVE	LENGTH	SIDE TO CENTER
	MIN NM	MAX NM	MIN FT LB	MAX FT LB	R/MIN	LB	KG		IN	IN
18EPE06D2	2	6	1.48	4.43	4000	2.20	1.0	1/4 SQUARE DRIVE	6.5	0.83
18EPE06Q	2	6	1.48	4.43	4000	2.20	1.0	1/4 QUICK CHANGE	7.0	0.83
18EPE12D3	3	12	2.21	8.9	1820	2.43	1.1	3/8 SQUARE DRIVE	7.2	0.83
18EPE12Q	3	12	2.21	8.9	1820	2.43	1.1	1/4 QUICK CHANGE	7.7	0.83
18EPE17D3	4	17	2.95	12.5	1290	2.43	1.1	3/8 SQUARE DRIVE	7.2	0.83
18EPE17Q	4	17	2.95	12.5	1290	2.43	1.1	1/4 QUICK CHANGE	7.7	0.83
18EPE22D3	5	22	3.69	16.2	985	2.43	1.1	3/8 SQUARE DRIVE	7.2	0.83
18EPE31D3	7	31	5.2	22.9	695	2.43	1.1	3/8 SQUARE DRIVE	7.2	0.83

48 Series - Corded Electric - Transducer Control - Pistol (3-1000 Nm)

Pistol tool for applications with torque up to 1000 Nm.

- Brushless Operation
- Resolver Control
- Transducer Control
- Memory Intelligence

MODEL	TORQUE RANGE				FREE SPEED	WEIGHT		OUTPUT DRIVE	LENGTH	SIDE TO CENTER
	MIN NM	MAX NM	MIN FT LB	MAX FT LB	R/MIN	LB	KG		IN	IN
48EPE12D2	3	12	2.21	8.9	4000	2.65	1.2	1/4 SQUARE DRIVE	7.7	0.83
48EPE12Q	3	12	2.21	8.9	4000	2.65	1.2	1/4 QUICK CHANGE	8.2	0.83
48EPE25D3	5	25	3.69	18.5	1820	2.87	1.3	3/8 SQUARE DRIVE	8.4	0.83
48EPE36D3	8	36	5.9	26.6	1290	2.87	1.3	3/8 SQUARE DRIVE	8.4	0.83
48EPE48D3	10	48	7.4	35.4	985	3.09	1.4	3/8 SQUARE DRIVE	8.6	0.83
48EPE65D4	13	65	9.6	48	750	5.1	2.3	1/2 SQUARE DRIVE	11.4	1.1
48EPE90D4	19	90	14.0	66	510	5.3	2.4	1/2 SQUARE DRIVE	12.0	1.1
48EPE125D4	26	125	19.2	92	360	5.3	2.4	1/2 SQUARE DRIVE	12.0	1.1
48EPE150D4	31	150	22.9	111	240	5.3	2.4	1/2 SQUARE DRIVE	12.0	0.91
48EPE200D6	125	195	92	144	180	9.5	4.3	3/4 SQUARE DRIVE	16.2	1.14
48EPE500D6	300	500	221	369	53	9.7	4.4	3/4 SQUARE DRIVE	16.2	1.14
48EPE1000D8	500	1000	369	738	33	16.1	7.3	1 SQUARE DRIVE	19.2	1.5

18 Series - Corded Electric - Transducer Control - Pistol - Push to Start (2-12 Nm)

Push to Start Pistol tool for applications with torque up to 12 Nm.

- Brushless Operation
- Resolver Control
- Transducer Control
- Memory Intelligence

MODEL	TORQUE RANGE				FREE SPEED	WEIGHT		LENGTH	SIDE TO CENTER
	MIN NM	MAX NM	MIN FT LB	MAX FT LB	R/MIN	LB	KG	IN	IN
18EPE06D3P	3	6	2.21	8.9	4000	2.65	1.2	8.8	0.83
18EPE06QP	2	6	1.48	4.43	4000	2.65	1.2	9.3	0.83
18EPE12D3P	3	12	2.21	8.9	1820	2.87	1.3	8.8	0.83
18EPE12QP	3	12	2.21	8.9	1820	2.87	1.3	9.3	0.83

18 Series - Corded Electric - Transducer Control - Right Angle (2-28 Nm)

Right angle tool for applications with torque up to 28 Nm.

- Brushless Operation
- Resolver Control
- Transducer Control
- Memory Intelligence

MODEL	TORQUE RANGE				FREE SPEED	WEIGHT		OUTPUT DRIVE	LENGTH	SIDE TO CENTER	ANGLE HEAD HEIGHT
	MIN NM	MAX NM	MIN FT LB	MAX FT LB	R/MIN	LB	KG		IN	IN	IN
18EAE08AL2	2	8	1.48	5.9	3000	2.87	1.3	1/4 SQUARE DRIVE	13.6	0.51	1.42
18EAE15AM3	4	15	2.95	11.1	1300	3.31	1.5	3/8 SQUARE DRIVE	14.8	0.59	1.61
18EAE22AM3	5	22	3.69	16.2	920	3.31	1.5	3/8 SQUARE DRIVE	14.8	0.59	1.61
18EAE28AM3	6	28	4.43	20.7	700	3.31	1.5	3/8 SQUARE DRIVE	14.8	0.59	1.61

48 Series - Corded Electric - Transducer Control - Right Angle (3-230 Nm)

Right angle tool for applications with torque up to 230 Nm.

- Brushless Operation
- Resolver Control
- Transducer Control
- Memory Intelligence

MODEL	TORQUE RANGE				FREE SPEED	WEIGHT		OUTPUT DRIVE	LENGTH	SIDE TO CENTER	ANGLE HEAD HEIGHT
	MIN NM	MAX NM	MIN FT LB	MAX FT LB	R/MIN	LB	KG		IN	IN	IN
48EAE15AL3	3	15	2.21	11.1	2855	3.75	1.7	3/8 SQUARE DRIVE	15.7	0.59	1.61
48EAE28AL3	6	28	4.43	20.7	1300	4.19	1.9	3/8 SQUARE DRIVE	16.2	0.59	1.61
48EAE41AM3	9	41	6.6	30.3	1090	4.41	2.0	3/8 SQUARE DRIVE	17.3	0.75	1.89
48EAE58AM3	12	58	8.9	42.8	770	4.41	2.0	3/8 SQUARE DRIVE	17.3	0.75	1.89
48EAE58AM4	12	58	8.9	42.8	770	4.41	2.0	1/2 SQUARE DRIVE	17.3	0.75	1.89
48EAE90AH4	18	87	13.3	64	515	6.6	3.0	1/2 SQUARE DRIVE	18.5	0.83	2.28
48EAE105AH4	27	104	19.9	77	340	6.6	3.0	1/2 SQUARE DRIVE	18.5	0.83	2.28
48EAE135MH4	27	133	19.9	98	265	7.3	3.3	1/2 SQUARE DRIVE	19.1	0.94	2.40
48EAE175AX6	36	176	26.6	130	190	10.1	4.6	3/4 SQUARE DRIVE	21.6	1.06	2.72
48EAE230AX6	46	230	33.9	170	145	10.1	4.6	3/4 SQUARE DRIVE	21.6	1.06	2.72

67 Series - Corded Electric - Transducer Control - Right Angle (46-2000 Nm)

Right angle tool for applications with torque up to 2000 Nm.

- Brushless Operation
- Resolver Control
- Transducer Control
- Memory Intelligence

MODEL	TORQUE RANGE				FREE SPEED	WEIGHT		OUTPUT DRIVE	LENGTH	SIDE TO CENTER	ANGLE HEAD HEIGHT
	MIN NM	MAX NM	MIN FT LB	MAX FT LB	R/MIN	LB	KG		IN	IN	IN
67EA235AL6	46	230	33.9	170	135	13.0	5.9	3/4 SQUARE DRIVE	25.8	1.02	2.28
67EA255AL6	55	255	40.6	188	115	13.0	5.9	3/4 SQUARE DRIVE	25.8	1.02	2.28
67EA310ML6	60	310	44.3	229	100	20.3	9.2	3/4 SQUARE DRIVE	29.1	1.06	2.56
67EA340AM6	70	335	52	247	90	20.9	9.5	3/4 SQUARE DRIVE	31.6	1.38	3.11
67EA460AM6	95	460	70	339	66	20.9	9.5	3/4 SQUARE DRIVE	31.6	1.38	3.11
67EA570AM6	115	570	85	421	53	20.9	9.5	3/4 SQUARE DRIVE	31.6	1.38	3.11
67EA860AH8	175	860	129	635	33	22.7	10.3	1 SQUARE DRIVE	25.3	1.5	9.3
67EA1035AH8	210	1035	155	764	25	22.9	10.4	1 SQUARE DRIVE	26.3	1.5	9.3
67EA1340AH8	270	1340	199	989	20	22.9	10.4	1 SQUARE DRIVE	26.3	1.5	9.3
67EA1700AH8	340	1700	251	1255	16	22.9	10.4	1 SQUARE DRIVE	26.3	1.5	9.3
67EA2010AH8	400	2000	295	1476	13	22.9	10.4	1 SQUARE DRIVE	26.3	1.5	9.3

18 Series - Corded Electric - Transducer Control - Right Angle - Floating Spindle (5.1-30 Nm)

For fixtured applications with torque up to 30 Nm.

- Brushless Operation
- Resolver Control
- Transducer Control
- Memory Intelligence

MODEL	TORQUE RANGE				FREE SPEED	WEIGHT		OUTPUT DRIVE	LENGTH	SIDE TO CENTER	ANGLE HEAD HEIGHT
	MIN NM	MAX NM	MIN FT LB	MAX FT LB	R/MIN	LB	KG		IN	IN	IN
18EAE16S131	5.1	16	3.76	11.8	1225	4.41	2.0	3/8 SQUARE DRIVE	16.0	0.55	2.76
18EAE23S131	7.2	23	5.3	17.0	860	4.41	2.0	3/8 SQUARE DRIVE	16.0	0.55	2.76
18EAE30S131	6	30	4.43	22.1	655	4.41	2.0	3/8 SQUARE DRIVE	16.0	0.55	2.76

48 Series - Corded Electric - Transducer Control - Right Angle - Floating Spindle (8-230 Nm)

For fixtured applications with torque up to 230 Nm.

- Brushless Operation
- Resolver Control
- Transducer Control
- Memory Intelligence

MODEL	TORQUE RANGE				FREE SPEED	WEIGHT		OUTPUT DRIVE	LENGTH	SIDE TO CENTER	ANGLE HEAD HEIGHT
	MIN NM	MAX NM	MIN FT LB	MAX FT LB	R/MIN	LB	KG		IN	IN	IN
48EAE37S231	8	37	5.9	27.3	1225	5.3	2.4	3/8 SQUARE DRIVE	18.7	0.67	2.72
48EAE52S231	11	52	8.1	38.4	860	5.3	2.4	3/8 SQUARE DRIVE	18.7	0.67	2.72
48EAE53S341	11	53	8.1	39.1	850	6.0	2.7	1/2 SQUARE DRIVE	20.0	0.87	3.27
48EAE75S341	15	75	11.1	55	600	6.0	2.7	1/2 SQUARE DRIVE	20.0	0.87	3.27
48EAE95S341	20	95	14.8	70	460	7.5	3.4	1/2 SQUARE DRIVE	20.5	0.87	3.27
48EAE110S341	23	110	17.0	81	400	7.5	3.4	1/2 SQUARE DRIVE	20.5	0.87	3.27
48EAE135S461	28	135	20.7	100	270	8.8	4.0	3/4 SQUARE DRIVE	20.6	1.06	3.70
48EAE230S461	47	230	34.7	170	150	10.6	4.8	3/4 SQUARE DRIVE	22.2	1.06	3.70

67 Series - Corded Electric - Transducer Control - Right Angle - Floating Spindle (30-255 Nm)

For fixtured applications with torque up to 255 Nm.

- Brushless Operation
- Resolver Control
- Transducer Control
- Memory Intelligence

MODEL	TORQUE RANGE				FREE SPEED	WEIGHT		OUTPUT DRIVE	LENGTH	SIDE TO CENTER	ANGLE HEAD HEIGHT
	MIN NM	MAX NM	MIN FT LB	MAX FT LB	R/MIN	LB	KG		IN	IN	IN
67EA150S461	30	150	22.1	111	210	13.0	5.9	3/4 SQUARE DRIVE	25.8	1.02	3.70
67EA185S461	37	185	27.3	137	170	13.0	5.9	3/4 SQUARE DRIVE	25.8	1.02	3.70
67EA210S461	42	210	31.0	155	155	13.0	5.9	3/4 SQUARE DRIVE	25.8	1.02	3.70
67EA235S461	46	230	33.9	170	135	13.0	5.9	3/4 SQUARE DRIVE	25.8	1.02	3.70
67EA255S461	55	255	40.6	188	115	13.0	5.9	3/4 SQUARE DRIVE	25.8	1.02	3.70

18 Series - Corded Electric - Transducer Control - Flush Socket (4.9-30 Nm)

The recessed, integrated socket allows access to bolts in low clearance applications.

- Brushless Operation
- Resolver Control
- Transducer Control
- Memory Intelligence

MODEL	TORQUE RANGE				FREE SPEED	WEIGHT		LENGTH	SIDE TO CENTER	ANGLE HEAD HEIGHT
	MIN NM	MAX NM	MIN FT LB	MAX FT LB	R/MIN	LB	KG	IN	IN	IN
18EAE16F1	4.9	16	3.62	11.8	1225	4.41	2.0	16.0	0.55	1.54
18EAE23F1	4.6	23	3.39	17.0	860	4.41	2.0	16.0	0.55	1.54
18EAE30F1	6	30	4.43	22.1	655	4.41	2.0	16.0	0.55	1.54

48 Series - Corded Electric - Transducer Control - Flush Socket (8-230 Nm)

The recessed, integrated socket allows access to bolts in low clearance applications.

- Brushless Operation
- Resolver Control
- Transducer Control
- Memory Intelligence

MODEL	TORQUE RANGE				FREE SPEED	WEIGHT		LENGTH	SIDE TO CENTER	ANGLE HEAD HEIGHT
	MIN NM	MAX NM	MIN FT LB	MAX FT LB	R/MIN	LB	KG	IN	IN	IN
48EAE37F2	8	37	5.9	27.3	1225	5.3	2.4	18.7	0.67	1.69
48EAE52F2	11	52	8.1	38.4	860	5.3	2.4	18.7	0.67	1.69
48EAE53F3	11	53	8.1	39.1	850	6.0	2.7	20.0	0.87	2.32
48EAE75F3	15	75	11.1	55	600	6.0	2.7	20.0	0.87	2.32
48EAE110F3	23	110	17.0	81	400	7.5	3.4	20.5	0.87	2.32
48EAE135F4	27	135	19.9	100	270	8.8	4.0	20.6	1.06	2.40
48EAE230F4	47	230	34.7	170	150	10.6	4.8	22.2	1.06	2.40

48 Series - Corded Electric - Transducer Control - Hold and Drive (11-227 Nm)

Increase productivity and safety by tightening suspension and frame components from a single side.

- Brushless Operation
- Resolver Control
- Transducer Control
- Memory Intelligence

MODEL	TORQUE RANGE				FREE SPEED	WEIGHT		LENGTH	SIDE TO CENTER	ANGLE HEAD HEIGHT
	MIN NM	MAX NM	MIN FT LB	MAX FT LB	R/MIN	LB	KG	IN	IN	IN
48EAE53H	11	53	8.1	39.1	850	7.9	3.6	20.2	1.06	2.40
48EAE75H	15	74	11.1	55	600	7.9	3.6	20.2	1.06	2.40
48EAE110H	23	112	17.0	83	400	8.8	4.0	20.2	1.06	2.40
48EAE135H	28	134	20.7	99	270	8.8	4.0	20.6	1.06	2.40
48EAE230H	47	227	34.7	168	150	10.6	4.8	22.2	1.06	2.40

18 Series - Corded Electric - Transducer Control - Inline (2-31 Nm)

Inline tool for applications with torque up to 31 Nm.

- Brushless Operation
- Resolver Control
- Transducer Control
- Memory Intelligence

MODEL	TORQUE RANGE				FREE SPEED	WEIGHT		LENGTH	SIDE TO CENTER
	MIN NM	MAX NM	MIN FT LB	MAX FT LB	R/MIN	LB	KG	IN	IN
18ESE06D2	2	6	1.48	4.43	4000	2.43	1.1	11.8	0.91
18ESE06Q	2	6	1.48	4.43	4000	2.43	1.1	12.3	0.91
18ESE12D3	3	12	2.21	8.9	1820	2.65	1.2	12.4	0.91
18ESE12Q	3	12	2.21	8.9	1820	2.65	1.2	13.0	0.91
18ESE17D3	4	17	2.95	12.5	1290	2.65	1.2	12.4	0.91
18ESE17Q	4	17	2.95	12.5	1290	2.65	1.2	13.0	0.91
18ESE22D3	5	22	3.69	16.2	985	2.65	1.2	12.4	0.91
18ESE31D3	7	31	5.2	22.9	695	2.65	1.2	12.4	0.91

48 Series - Corded Electric - Transducer Control - Inline (3-150 Nm)

Inline tool for applications with torque up to 150 Nm.

- Brushless Operation
- Resolver Control
- Transducer Control
- Memory Intelligence

MODEL	TORQUE RANGE				FREE SPEED	WEIGHT		LENGTH	SIDE TO CENTER
	MIN NM	MAX NM	MIN FT LB	MAX FT LB	R/MIN	LB	KG	IN	IN
48ESE12D2	3	12	2.21	8.9	4000	3.09	1.4	13.0	0.91
48ESE12Q	3	12	2.21	8.9	4000	3.09	1.4	13.5	0.91
48ESE25D3	6	25	4.43	18.5	1820	3.31	1.5	13.6	0.91
48ESE36D3	8	36	5.9	26.6	1290	3.31	1.5	13.6	0.91
48ESE48D3	10	48	7.4	35.4	985	3.31	1.5	13.8	0.91
48ESE65D4	13	65	9.6	48	750	5.3	2.4	16.6	1.14
48ESE90D4	19	90	14.0	66	510	5.5	2.5	17.1	1.14
48ESE125D4	26	125	19.2	92	360	5.5	2.5	17.1	1.14
48ESE150D4	31	150	22.9	111	240	5.5	2.5	17.1	1.14

67 Series - Corded Electric - Transducer Control - Inline (13-4050 Nm)

Inline tool for applications with torque up to 4050 Nm.

- Brushless Operation
- Resolver Control
- Transducer Control
- Memory Intelligence

MODEL	TORQUE RANGE				FREE SPEED	WEIGHT		OUTPUT DRIVE	LENGTH	SIDE TO CENTER
	MIN NM	MAX NM	MIN FT LB	MAX FT LB	R/MIN	LB	KG		IN	IN
67ES135D4	27	135	19.9	100	245	10.4	4.7	1/2 SQUARE DRIVE	21.0	1.3
67ES190D6	38	190	28.0	140	165	11.7	5.3	3/4 SQUARE DRIVE	20.5	1.3
67ES285D6	57	285	42.1	210	115	11.7	5.3	3/4 SQUARE DRIVE	20.5	1.3
67ES385D6	77	386	57	285	83	11.7	5.3	3/4 SQUARE DRIVE	20.5	1.3
67ES475D6	95	475	70	351	67	11.9	5.4	3/4 SQUARE DRIVE	20.9	1.3
67ES610D6	122	610	90	450	50	11.9	5.4	3/4 SQUARE DRIVE	20.9	1.3
67ES850D8	170	848	125	626	33	17.0	7.7	1 SQUARE DRIVE	23.8	1.5
67ES1050D8	210	1050	155	775	27	17.0	7.7	1 SQUARE DRIVE	23.8	1.5
67ES1670D8	334	1668	246	1231	17	17.0	7.7	1 SQUARE DRIVE	23.8	1.5
67ES2060D8	412	2060	304	1520	14	17.0	7.7	1 SQUARE DRIVE	23.8	1.5
67ES4050D12	810	4050	598	2989	6	45.2	20.5	1-1/2 SQUARE DRIVE	24.5	2.36

18 Series - Corded Electric - Transducer Control - Inline - Floating Spindle (2-17 Nm)

Inline Floating Spindle tool for applications with torque up to 17 Nm.

- Brushless Operation
- Resolver Control
- Transducer Control
- Memory Intelligence

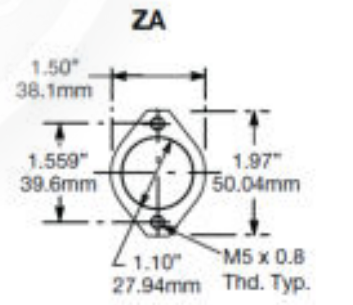

Dimensional tolerances = ± .004" (0.1mm)
Spindle Float: 1" (25mm) ZA

MODEL	TORQUE RANGE				FREE SPEED	WEIGHT		OUTPUT DRIVE	LENGTH	SIDE TO CENTER
	MIN NM	MAX NM	MIN FT LB	MAX FT LB	R/MIN	LB	KG		IN	IN
18ESE06ZA	2	6	1.48	4.43	4000	3.09	1.4	1/4 SQUARE DRIVE	15.5	0.91
18ESE12ZA	3	12	2.21	8.9	1820	3.31	1.5	1/4 SQUARE DRIVE	16.0	0.91
18ESE17ZA	4	17	2.95	12.5	1290	3.31	1.5	1/4 SQUARE DRIVE	16.0	0.91

48 Series - Corded Electric - Transducer Control - Inline - Floating Spindle (3-248 Nm)

Inline Floating Spindle tool for applications with torque up to 248 Nm.

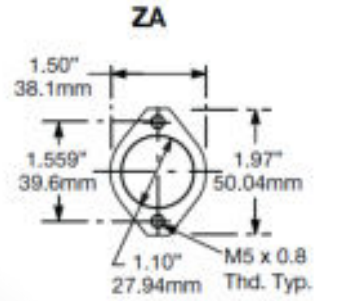

Dimensional tolerances = ± .004" (0.1mm)
Spindle Float: 1" (25mm) ZA

- Brushless Operation
- Resolver Control
- Transducer Control
- Memory Intelligence

MODEL	TORQUE RANGE				FREE SPEED	WEIGHT		OUTPUT DRIVE	LENGTH	SIDE TO CENTER
	MIN NM	MAX NM	MIN FT LB	MAX FT LB	R/MIN	LB	KG		IN	IN
48ESE12ZA	3	12	2.21	8.9	4000	3.31	1.5	1/4 SQUARE DRIVE	16.7	0.91
48ESE271ZB	8	27	5.9	19.9	1820	5.7	2.6	3/8 SQUARE DRIVE	22.0	0.91
48ESE361ZB	7	36	5.2	26.6	1290	5.7	2.6	3/8 SQUARE DRIVE	22.0	0.91
48ESE602ZB	11	57	8.1	42.1	855	8.4	3.8	1/2 SQUARE DRIVE	24.4	1.1
48ESE702ZB	14	68	10.3	50	570	8.4	3.8	1/2 SQUARE DRIVE	24.4	1.1
48ESE802ZB	17	82	12.5	61	450	9.7	4.4	1/2 SQUARE DRIVE	26.7	1.1
48ESE1152ZB	25	115	18.5	85	320	9.7	4.4	1/2 SQUARE DRIVE	26.7	1.1
48ESE1502ZB	31	150	22.9	111	245	9.7	4.4	1/2 SQUARE DRIVE	26.7	1.1
48ESE1653ZB	33	165	24.4	122	220	14.6	6.6	3/4 SQUARE DRIVE	28.6	1.57
48ESE2503ZB	50	248	36.9	183	145	14.6	6.6	3/4 SQUARE DRIVE	28.6	1.57

67 Series - Corded Electric - Transducer Control - Inline - Floating Spindle (13-2060 Nm)

Inline Floating Spindle tool for applications with torque up to 2060 NM

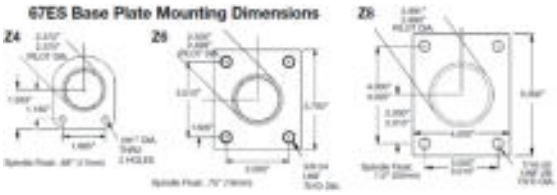

- Brushless Operation
- Resolver Control
- Transducer Control
- Memory Intelligence

MODEL	TORQUE RANGE				FREE SPEED	WEIGHT		OUTPUT DRIVE	LENGTH	SIDE TO CENTER
	MIN NM	MAX NM	MIN FT LB	MAX FT LB	R/MIN	LB	KG		IN	IN
67ES65BZ4	13	64	9.6	47.2	535	10.8	4.9	1/2 SQUARE DRIVE	21.0	1.3
67ES105BZ4	21	104	15.5	77	330	10.8	4.9	1/2 SQUARE DRIVE	21.0	1.3
67ES190Z6	38	190	28.0	140	165	15.7	7.1	3/4 SQUARE DRIVE	22.0	1.3
67ES285Z6	57	285	42.1	210	115	15.7	7.1	3/4 SQUARE DRIVE	22.0	1.3
67ES385Z6	77	385	57	284	83	15.7	7.1	3/4 SQUARE DRIVE	22.0	1.3
67ES475Z6	95	475	70	351	67	16.1	7.3	3/4 SQUARE DRIVE	22.4	1.3
67ES610Z6	122	610	90	450	50	16.1	7.3	3/4 SQUARE DRIVE	22.4	1.3
67ES850Z8	170	848	125	626	33	20.1	9.1	1 SQUARE DRIVE	23.8	1.5
67ES1050Z8	210	1050	155	775	27	20.1	9.1	1 SQUARE DRIVE	23.8	1.5
67ES1670Z8	334	1668	246	1231	17	20.1	9.1	1 SQUARE DRIVE	23.8	1.5
67ES2060Z8	412	2060	304	1520	14	20.1	9.1	1 SQUARE DRIVE	23.8	1.5

18 Series - Corded Electric - Transducer Control - Inline - Push to Start (2-12 Nm)

Push to Start Inline tool for applications with torque up to 12 Nm.

- Brushless Operation
- Resolver Control
- Transducer Control
- Memory Intelligence

MODEL	TORQUE RANGE				FREE SPEED	WEIGHT		LENGTH	SIDE TO CENTER
	MIN NM	MAX NM	MIN FT LB	MAX FT LB	R/MIN	LB	KG	IN	IN
18ESE06D3P	3	6	2.21	8.9	4000	2.87	1.3	14.2	0.91
18ESE06QP	2	6	1.48	4.43	4000	2.87	1.3	14.8	0.91
18ESE12D3P	3	12	2.21	8.9	1820	3.09	1.4	14.2	0.91
18ESE12QP	3	12	2.21	8.9	1820	3.09	1.4	14.8	0.91

48 Series - Corded Electric - Transducer Control - Crowfoot (10.5-30 Nm)

Multiple socket configurations and head angles for bolts on hard to reach applications.

- Brushless Operation
- Resolver Control
- Transducer Control
- Memory Intelligence

MODEL	TORQUE RANGE				FREE SPEED	WEIGHT		LENGTH
	MIN NM	MAX NM	MIN FT LB	MAX FT LB	R/MIN	LB	KG	IN
48ECE30C1	10.5	30	7.7	22.1	860	5.5	2.5	20.5
48ECE30C3	10.5	30	7.7	22.1	860	5.5	2.5	20.5

48 Series - Corded Electric - Transducer Control - Tubenut (10-40 Nm)

Multiple head types and over 500 socket configurations to fit any fluid line application.

- Brushless Operation
- Resolver Control
- Transducer Control
- Memory Intelligence

MODEL	TORQUE RANGE				FREE SPEED	WEIGHT		LENGTH
	MIN NM	MAX NM	MIN FT LB	MAX FT LB	R/MIN	LB	KG	IN
48ETE20T2	10	20	7.4	14.8	1425	4.41	2.0	16.9
48ETE30T3	15	30	11.1	22.1	1030	4.41	2.0	16.6
48ETE40T4	20	40	14.8	29.5	770	5.3	2.4	17.9

Tool Cable - 18/48 Series - Extension

- Use with 18/48 Series corded tools.
- For applications requiring cable lengths greater than 15 meters.

MODEL	LENGTH	LENGTH
	FT	M
301877-10M	32.8	10
301877-15M	49.2	15
301877-20M	65.6	20

Tool Cable - 18/48 Series

- Use to connect an 18/48 Series tool to an mPro400 controller.

MODEL	LENGTH	LENGTH
	FT	M
301866-3M	9.8	3
301866-6M	19.7	6
301866-8M	26.2	8
301866-10M	32.8	10
301866-15M	49.2	15

Tool Cable - 18/48 Series - Inline - Swivel

- Use to connect an 18/48 Series tool to an mPro400 controller.

MODEL	LENGTH	LENGTH
	FT	M
301904-3M	9.8	3
301904-6M	19.7	6
301904-10M	32.8	10

Tool Cable - 18/48 Series - Right Angle - Swivel

- Use to connect an 18/48 Series tool to an mPro400 controller.
- For applications with tools suspended overhead.

MODEL	LENGTH	LENGTH
	FT	M
301903-3M	9.8	3
301903-6M	19.7	6
301903-8M	26.2	8
301903-10M	32.8	10
301903-15M	49.2	15

Tool Cable - 67 Series - Extension

- Use with 67 Series corded tools
- For applications requiring cable lengths greater than 15 meters

MODEL	DESCRIPTION	LENGTH	LENGTH
		FT	M
542779-6M	6 METER EXTENSION CABLE	19.7	6
542779-10M	10 METER EXTENSION CABLE	32.8	10
542779-15M	15 METER EXTENSION CABLE	49.2	15
542779-20M	20 METER EXTENSION CABLE	65.6	20
542779-25M	25 METER EXTENSION CABLE	82.0	25

Tool Cable - 67 Series - Inline - Swivel

- Use to connect an 67 Series tool to an mPro400 controller

MODEL	DESCRIPTION	LENGTH	LENGTH
		FT	M
544056-3M	3 METER INLINE SWIVEL TOOL CABLE	9.8	3
544056-6M	6 METER INLINE SWIVEL TOOL CABLE	19.7	6
544056-8M	8 METER INLINE SWIVEL TOOL CABLE	26.2	8
544056-10M	10 METER INLINE SWIVEL TOOL CABLE	32.8	10
544056-15M	15 METER INLINE SWIVEL TOOL CABLE	49.2	15

Tool Cable - 67 Series - Right Angle - Swivel

- Use to connect an 67 Series tool to an mPro400 controller

MODEL	DESCRIPTION	LENGTH	LENGTH
		FT	M
544055-3M	3 METER RIGHT ANGLE SWIVEL TOOL CABLE	9.8	3
544055-6M	6 METER RIGHT ANGLE SWIVEL TOOL CABLE	19.7	6
544055-8M	8 METER RIGHT ANGLE SWIVEL TOOL CABLE	26.2	8
544055-10M	10 METER RIGHT ANGLE SWIVEL TOOL CABLE	32.8	10
544055-15M	15 METER RIGHT ANGLE SWIVEL TOOL CABLE	49.2	15

Tool Cable - 67 Series

- Use to connect an 67 Series tool to an mPro400 controller

MODEL	DESCRIPTION	LENGTH	LENGTH
		FT	M
542778-3M	3 METER TOOL CABLE	9.8	3
542778-6M	6 METER TOOL CABLE	19.7	6
542778-8M	8 METER TOOL CABLE	26.2	8
542778-10M	10 METER TOOL CABLE	32.8	10
542778-15M	15 METER TOOL CABLE	49.2	15

Suspension Bail

- For use with spring balancer
- Improved operator ergonomics

MODEL	DESCRIPTION
1110909	18/48 SERIES SUSPENSION BAIL (EXCL. PISTOLS)
942045PT	STANDARD TOOL SUSPENSION BAIL FOR LIVEWIRE 2 L SERIES
942185PT	ROTATING SUSPENSION BAIL FOR LIVEWIRE 2 L SERIES
S387983	ROTATING SUSPENSION BAIL FOR RIGHT ANGLE NUTRUNNER (NOT FOR LIVEWIRE 2 L SERIES)

Lever Extension Kit

- Operator ergonomics

MODEL	DESCRIPTION
541757	18/48 SERIES LEVER EXTENSION KIT FOR USE WITH NON-SWIVEL CABLES
543414	18/48 SERIES LEVER EXTENSION KIT FOR USE WITH SWIVEL CABLES

19 Series - Angle Nutrunner - Clutch Shut-Off - Lever Start - Collar Reverse

Durable Clecomatic Clutch delivers best-in-class torque repeatability and long calibration cycle

- Durable Clecomatic Clutch delivers best-in-class torque repeatability and long calibration cycle
- Lightweight, ergonomic and durable handle designed with operator in mind
- Engineered to suit a wide range of applications, from fast-paced assembly to aerospace
- Grip material tested to withstand a range of industrial chemicals

Model Number Example

Series
19
24
34

Rotation
R-Reversible

Tool Style
A – Right Angle

Torque Control
A – Clecomatic
S – Stall

Maximum Torque Nm
(Rounded to the nearest Nm)

Square Drive
2 – 1/4" (AL only)
3 – 3/8"
4 – 1/2" (AZ only)

Angle Head Size
L – Light Duty
M – Medium Duty
H – Heavy Duty
X – Extra Heavy Duty
Z – Super Heavy Duty

Tool Termination
A Angle head

MODEL	TORQUE RANGE				FREE SPEED	LENGTH	WEIGHT		SIDE TO CENTER	OUTPUT DRIVE	AIR CONSUMPTION	AIR INLET SIZE
	MIN NM	MAX NM	MIN FT LB	MAX FT LB	R/MIN	IN	LB	KG	IN		SCFM	IN
19RAA02AM2	0.5	2.1	0.3	1.5	2400	11.9	1.70	0.77	0.360	1/4 SQUARE DRIVE	11	1/8
19RAA02AH2	0.5	2.4	0.3	1.7	2100	12.5	1.81	0.82	0.50	1/4 SQUARE DRIVE	11	1/8
19RAA02AH3	0.5	2.4	0.3	1.7	2100	12.5	1.81	0.82	0.50	3/8 SQUARE DRIVE	11	1/8
19RAA03AM2	0.6	3.1	0.4	2.2	1650	12.2	1.81	0.82	0.360	1/4 SQUARE DRIVE	11	1/8
19RAA03AH2	0.7	3.4	0.5	2.5	1450	12.7	1.81	0.82	0.50	1/4 SQUARE DRIVE	11	1/8
19RAA03AH3	0.7	3.4	0.5	2.5	1450	12.7	1.81	0.82	0.50	3/8 SQUARE DRIVE	11	1/8
19RAA04AM2	1.4	4.7	1	3.4	950	12.0	1.70	0.77	0.360	1/4 SQUARE DRIVE	11	1/8
19RAA05AM2	1.4	5.7	1	4.2	570	12.4	1.81	0.82	0.360	1/4 SQUARE DRIVE	11	1/8
19RAA06AH2	1.5	6	1.1	4.4	850	12.5	1.81	0.82	0.50	1/4 SQUARE DRIVE	11	1/8
19RAA06AH3	1.5	6	1.1	4.4	850	12.5	1.81	0.82	0.50	3/8 SQUARE DRIVE	11	1/8
19RAA07AH2	1.5	6.8	1.1	5	500	12.9	1.90	0.86	0.50	1/4 SQUARE DRIVE	11	1/8
19RAA07AH3	1.5	6.8	1.1	5	500	12.9	1.90	0.86	0.50	3/8 SQUARE DRIVE	11	1/8
19RAA09AH2	2.0	8.5	1.4	6.2	500	12.9	1.90	0.86	0.50	1/4 SQUARE DRIVE	11	1/8
19RAA09AH3	2.0	8.5	1.4	6.2	500	12.9	1.90	0.86	0.50	3/8 SQUARE DRIVE	11	1/8
19RAA11AH2	2.5	11.3	1.8	8.3	340	12.3	2.09	0.95	0.50	1/4 SQUARE DRIVE	11	1/8
19RAA11AH3	2.5	11.3	1.8	8.3	340	12.3	2.09	0.95	0.50	3/8 SQUARE DRIVE	11	1/8
19RAA11AHM	2.5	11.3	1.8	8.3	340	12.3	2.09	0.95	0.50			1/8
19RAA12AH2	2.5	11.3	1.8	8.3	200	12.9	1.90	0.86	0.50	1/4 SQUARE DRIVE	11	1/8
19RAA12AH3	2.5	11.3	1.8	8.3	200	12.9	1.90	0.86	0.50	3/8 SQUARE DRIVE	11	1/8
19RAA12AHQ	2.5	11.3	1.8	8.3	200	12.9	1.90	0.86	0.50	1/4 QUICK CHANGE	11	1/8

General:Tool performance rated at 90 psi (620kPa) air pressure.
Standard Equipment:Operating instructions & service manual.
All torque springs required to meet indicated torque specification.
Optional Equipment:
Non-Reverse Kit: 207030
Torque Signal Kit: 301106 (Clecomatic clutch only)
Overhose: 207019
Quick Change and 1/4" magnetic hex outputs available on AH3 models only. Quick Change: Change AH3 to AHQ 1/4" Magnetic Hex: Change AH3 to AHM

24 Series - Angle Nutrunner - Clutch Shut-Off - Lever Start - Collar Reverse

Lightweight, ergonomic, and easy to service

- Lightweight, ergonomic, and easy to service
- Indexable angle head for added versatility
- Durable Clecomatic Clutch delivers best-in-class torque repeatability and long calibration cycle
- Heavy-duty Cleco motor is the industry standard for reliability
- Oil-less blades reduce oil mist in work area

Model Number Example

Series
19
24
34

Rotation
R-Reversible

Tool Style
A – Right Angle

Torque Control
A – Clecomatic
S – Stall

Maximum Torque Nm
(Rounded to the nearest Nm)

Tool Termination
A Angle head

Angle Head Size
L – Light Duty
M – Medium Duty
H – Heavy Duty
X – Extra Heavy Duty
Z – Super Heavy Duty

Square Drive
2 – 1/4" (AL only)
3 – 3/8"
4 – 1/2" (AZ only)

MODEL	TORQUE RANGE				FREE SPEED	LENGTH	WEIGHT		HEAD HEIGHT	SIDE TO CENTER	OUTPUT DRIVE	AIR CON-SUMPTION	AIR INLET SIZE
	MIN NM	MAX NM	MIN FT LB	MAX FT LB	R/MIN	IN	LB	KG	IN	IN		SCFM	IN
24RAA11AL3	7.0	10.8	5.0	8.0	1260	14.1	2.60	1.18	1.08	0.47	3/8 SQUARE DRIVE	23.9	3/8
24RAA12AM3	7.0	12.2	5.0	9.0	1200	14.2	2.80	1.27	1.16	0.52	3/8 SQUARE DRIVE	23.9	3/8
24RAA19AM3	10.0	19	7.0	14.0	700	15.0	3.20	1.45	1.16	0.52	3/8 SQUARE DRIVE	23.9	3/8
24RAA23AM3	12.0	23.0	9.0	17.0	600	15.0	3.20	1.45	1.16	0.52	3/8 SQUARE DRIVE	23.9	3/8

General: Tool performance rated at 90 psi (620kPa) air pressure.
Standard Equipment:
Operating instructions & service manual
Suspension bail
Clutch adjustment tool
Optional Equipment:
Assembly wrench: 201898
Torque signal kit: 301937PT
Non-reversible kit: 204999
Exhaust Overhose: 204978

34 Series - Angle Nutrunner - Clutch Shut-Off - Lever Start - Collar Reverse

Lightweight, ergonomic, and easy to service

- Lightweight, ergonomic, and easy to service
- Indexable angle head for added versatility
- Durable Clecomatic Clutch delivers best-in-class torque repeatability and long calibration cycle
- Heavy-duty Cleco motor is the industry standard for reliability
- Oil-less blades reduce oil mist in work area

Model Number Example

Series
19
24
34

Rotation
R-Reversible

Tool Style
A – Right Angle

Torque Control
A – Clecomatic
S – Stall

Maximum Torque Nm
(Rounded to the nearest Nm)

Square Drive
2 – 1/4" (AL only)
3 – 3/8"
4 – 1/2" (AZ only)

Angle Head Size
L – Light Duty
M – Medium Duty
H – Heavy Duty
X – Extra Heavy Duty
Z – Super Heavy Duty

Tool Termination
A Angle head

MODEL	TORQUE RANGE				FREE SPEED	LENGTH	WEIGHT		HEAD HEIGHT	SIDE TO CENTER	OUTPUT DRIVE	AIR CON-SUMPTION	AIR INLET SIZE
	MIN NM	MAX NM	MIN FT LB	MAX FT LB	R/MIN	IN	LB	KG	IN	IN		SCFM	IN
34RAA08AL3	5.4	8.1	4.0	6.0	2060	14.5	2.69	1.22	1.08	0.47	3/8 SQUARE DRIVE	33.9	3/8
34RAA11AL3	6.8	10.8	5.0	8.0	1675	14.5	2.69	1.22	1.08	0.47	3/8 SQUARE DRIVE	33.9	3/8
34RAA15AM3	9.5	14.9	7.0	11.0	1185	14.6	1.30	0.59	1.16	0.52	3/8 SQUARE DRIVE	33.9	3/8
34RAA26AH3	13.6	25.8	10.0	19.0	710	15.4	3.20	1.45	1.22	0.57	3/8 SQUARE DRIVE	33.9	3/8
34RAA28AH3	13.6	27.1	10.0	20.0	580	15.4	3.31	1.5	1.16	0.52	3/8 SQUARE DRIVE	33.9	3/8
34RAA33AX3	16.3	32.5	12.0	24.0	545	15.5	3.51	1.59	1.36	0.67	3/8 SQUARE DRIVE	33.9	3/8
34RAA37AX3	19	36.6	14.0	27.0	480	15.6	3.40	1.54	1.36	0.67	3/8 SQUARE DRIVE	33.9	3/8
34RAA47AX3	23.0	47.0	17.0	35.0	385	15.6	3.40	1.54	1.36	0.67	3/8 SQUARE DRIVE	33.9	3/8
34RAA68AZ3	34.0	68.0	25.0	50	255	16.2	3.70	1.68	1.60	0.7	3/8 SQUARE DRIVE	33.9	3/8
34RAA68AZ4	34.0	68.0	25.0	50	255	16.2	1.70	0.77	1.60	0.7	1/2 SQUARE DRIVE	33.9	3/8
34RAA75AZ3	38.0	75.0	28.0	55	155	17.0	3.90	1.77	1.60	0.7	3/8 SQUARE DRIVE	33.9	3/8
34RAA75AZ4	38.0	75.0	28.0	55	155	17.0	3.90	1.77	1.60	0.7	1/2 SQUARE DRIVE	33.9	3/8

General: Tool performance rated at 90 psi (620kPa) air pressure.
Standard Equipment:
Operating instructions & service manual
Suspension bail
Clutch adjustment tool
Optional Equipment:
Assembly wrench: 201898
Torque signal kit: 301937PT
Non-reversible kit: 204999
Exhaust Overhose: 204978

55/75 Series - Angle Nutrunner - Clutch Shut-Off - Lever Start - Collar Reverse

Heavy-duty Cleco motor is the industry standard for reliability

- Heavy-duty Cleco motor is the industry standard for reliability
- Durable Clecomatic Clutch delivers best-in-class torque repeatability and long calibration cycle
- Planetary gears designed for tool speed changes with minimal parts service and replacement
- Heavy-duty spindle bearings and splined retractable spindles reduces friction, improves torque repeatability, and prolongs life.
- External Torque Adjustment
- Rotating Exhaust Deflector

45, 55 & 75 Model Number Example

Series
45, 55, 75

Rotation
N-Non Reversible
R-Reversible

Nutrunner

Torque Control
A – Clecomatic
– – Stall

Start Type
L – Lever
B – Button

Gear Train
2, 3, 4, 6, 7, 10

Angle Head
P, T, V, X

Sq. Drive
3 – 3/8”
4 – 1/2”
6 – 3/4”

MODEL	TORQUE RANGE				FREE SPEED	LENGTH	WEIGHT		HEAD HEIGHT	SIDE TO CENTER	OUTPUT DRIVE	AIR CON-SUMPTION	AIR INLET SIZE
	MIN NM	MAX NM	MIN FT LB	MAX FT LB	R/MIN	IN	LB	KG	IN	IN		SCFM	IN
55RNAL-6P-4	30.0	54.0	22.0	40.0	440	19.1	7.4	3.35	1.63	0.72	1/2 SQUARE DRIVE	55	1/2
55RNAL-4P-4	35.0	73.0	26.0	54.0	330	19.1	7.4	3.35	1.63	0.72	1/2 SQUARE DRIVE	55	1/2
55RNAL-4T-4	39.0	87.0	29.0	64.0	280	19.3	7.8	3.52	1.97	0.88	1/2 SQUARE DRIVE	55	1/2
55RNAL-3P-4*	49.0	108.0	36.0	80.0	220	19.1	7.4	3.35	1.63	0.72	1/2 SQUARE DRIVE	55	1/2
55RNAL-3T-4	58.0	129.0	43.0	95.0	190	19.3	7.8	3.52	1.97	0.88	1/2 SQUARE DRIVE	55	1/2
55RNAL-2T-4*	68.0	170.0	50.0	125.0	140	19.3	7.8	3.52	1.97	0.88	1/2 SQUARE DRIVE	55	1/2
75RNAL-3V-4	95.0	190.0	70.0	140.0	175	21.9	13.2	6.01	2.50	1.09	1/2 SQUARE DRIVE	70	1/2
75RNAL-2V-4	122.0	255.0	90.0	190.0	130	21.9	13.2	6.01	2.50	1.09	1/2 SQUARE DRIVE	70	1/2
75RNAL-2X-6	203.0	410.0	150.0	305.0	80	22.6	15.0	6.8	2.75	1.44	3/4 SQUARE DRIVE	70	1/2
75RNAL-3X-6	150.0	305.0	110.0	225.0	110	22.6	15.0	6.8	2.75	1.44	3/4 SQUARE DRIVE	70	1/2

General:
Tool performance data measured at 6.2 bar inlet air pressure at the air inlet tube.
Standard Equipment:
Operation and maintenance instructions
Torque reaction mounting plate (75 series)
All torque springs necessary to achieve the stated torque.
* Maximum torque of tool exceeds the maximum torque rating for the head, high maintenance should be expected when operated at the upper torque capacity range

19 Series - Angle Nutrunner - Stall - Lever Start - Collar Reverse

Designed for soft-draw applications

- Designed for soft-draw applications
- Compact angle head provides superb access
- Lightweight, ergonomic, and easy to service
- Grip material tested to withstand a range of industrial chemicals

Model Number Example

Series
19
24
34

Rotation
R-Reversible

Tool Style
A – Right Angle

Torque Control
A – Clecomatic
S – Stall

Maximum Torque Nm
(Rounded to the nearest Nm)

Square Drive
2 – 1/4" (AL only)
3 – 3/8"
4 – 1/2" (AZ only)

Angle Head Size
L – Light Duty
M – Medium Duty
H – Heavy Duty
X – Extra Heavy Duty
Z – Super Heavy Duty

Tool Termination
A Angle head

MODEL	TORQUE RANGE				FREE SPEED	LENGTH	WEIGHT		HEAD HEIGHT	SIDE TO CENTER	AIR CONSUMPTION	AIR INLET SIZE
	MIN NM	MAX NM	MIN FT LB	MAX FT LB	R/MIN	IN	LB	KG	IN	IN	SCFM	IN
19RAS03AM2	0	3.2	0	2.3	1700	11.4	1.30	0.59	1.06 IN	0.36	11.0	1/8
19RAS04AH2*	0	3.6	0	2.6	1500	11.2	1.41	0.64	1.19 IN	0.5	11.0	1/8
19RAS05AM2	0	5.2	0	3.8	850	10.6	1.19	0.54	1.06 IN	0.36	11.0	1/8
19RAS06AH3	0	6.2	0	4.6	880	11.0	1.30	0.59	1.19 IN	0.5	11.0	1/8

General: Tool performance rated at 90 psi (620kPa) air pressure.
Standard Equipment:
Operating instructions & service manual
Suspension bail (19 series)
Torque reaction mounting plate (75 series)
Optional Equipment:
19 Series: Non-Reverse Kit: 207030
Overhose: 207019
Quick Change and 1/4" magnetic hex outputs available on AH3 models only.
Quick Change: Change AH3 to AHQ
1/4" Magnetic Hex: Change AH3 to AHM
24/34 Series:Assembly wrench: 201898
Non-reverse kit 204999
* Maximum torque of tool exceeds the maximum torque rating for the head, increased maintenance should be expected when operated at the upper torque capacity range.

55/75 Series - Angle Nutrunner - Stall - Lever Start - Collar Reverse

Heavy-duty Cleco motor is the industry standard for reliability

- Heavy-duty Cleco motor is the industry standard for reliability
- Engineered for performance, durability, mounting versatility, and serviceability
- Planetary gears designed for tool speed changes with minimal parts service and replacement
- Heavy-duty spindle bearings and splined retractable spindles reduces friction, improves torque repeatability, and prolongs life.

45, 55 & 75 Model Number Example

Series
45, 55, 75

Rotation
N-Non Reversible
R-Reversible

Nutrunner

Torque Control
A – Clecomatic
– – Stall

Start Type
L – Lever
B – Button

Gear Train
2, 3, 4, 6, 7, 10

Angle Head
P, T, V, X

Sq. Drive
3 – 3/8"
4 – 1/2"
6 – 3/4"

MODEL	TORQUE RANGE				FREE SPEED	LENGTH	WEIGHT		HEAD HEIGHT	SIDE TO CENTER	AIR CONSUMPTION	AIR INLET SIZE
	MIN NM	MAX NM	MIN FT LB	MAX FT LB	R/MIN	IN	LB	KG	IN	IN	SCFM	IN
55RNL-7T-4	0	55.6	0	41.0	490	16.1	6.1	2.78	1.63	0.72	55	1/2
55RNL-4T-4	0	92.0	0	68.0	290	16.7	6.5	2.95	1.63	0.72	55	1/2
55RNL-3T-4*	0	135.0	0	100	195	16.7	6.5	2.95	1.63	0.72	55	1/2
55RNL-2T-4	0	176.0	0	130	145	16.7	6.5	2.95	1.63	0.72	55	1/2
75RNL-3V-4	0	210.0	0	155.0	190	19.4	11.4	5.16	11.4	1.09	70	1/2
75RNL-2V-4	0	278.0	0	205.0	140	19.4	11.4	5.16	2.50	1.09	70	1/2
75RNL-3X-6	0	330.0	0	245.0	120	20.1	13.1	5.95	2.75	1.44	70	1/2
75RNL-2X-6	0	440.0	0	325.0	90	20.1	13.1	5.95	2.75	1.44	70	1/2
75RNL-4V-4	0	142.0	0	105.0	280	19.4	11.4	5.16	11.4	1.09	70	1/2

GENERAL:
Tool performance data measured at 6.2 bar inlet air pressure at the air inlet tube.
STANDARD EQUIPMENT:
Operation and maintenance instructions
Torque reaction mounting plate (75 series)
All torque springs necessary to achieve the stated torque.
* The tool maximum torque exceeds the maximum torque of the output drive; increased maintenance is to be expected if the tool is operated in the upper torque range.

55/75 Series - Angle Nutrunner - Stall - Lever Start - Non-reversible

Heavy-duty Cleco motor is the industry standard for reliability

- Heavy-duty Cleco motor is the industry standard for reliability
- Engineered for performance, durability, mounting versatility, and serviceability
- Planetary gears designed for tool speed changes with minimal parts service and replacement
- Heavy-duty spindle bearings and splined retractable spindles reduces friction, improves torque repeatability, and prolongs life.

45, 55 & 75 Model Number Example

Series
45, 55, 75

Rotation
N-Non Reversible
R-Reversible

Nutrunner

Torque Control
A – Clecomatic
– – Stall

Start Type
L – Lever
B – Button

Gear Train
2, 3, 4, 6, 7, 10

Angle Head
P, T, V, X

Sq. Drive
3 – 3/8”
4 – 1/2”
6 – 3/4”

MODEL	TORQUE RANGE				FREE SPEED	LENGTH	WEIGHT		HEAD HEIGHT	SIDE TO CENTER	AIR CONSUMPTION	AIR INLET SIZE
	MIN NM	MAX NM	MIN FT LB	MAX FT LB	R/MIN	IN	LB	KG	IN	IN	SCFM	IN
55NL-2T-4	0	190.0	0	140	210	16.7	6.4	2.89	1.97	0.88	55	1/2
55NL-3T-4	0	149.0	0	110.0	290	16.7	6.4	2.89	1.97	0.88	55	1/2

GENERAL:
Tool performance data measured at 6.2 bar inlet air pressure at the air inlet tube.
STANDARD EQUIPMENT:
Operation and maintenance instructions
Torque reaction mounting plate (75 series)
All torque springs necessary to achieve the stated torque.
Maximum torque of tool exceeds the maximum torque rating for the head, high maintenance shouldbe expected when operated at the upper torque capacity range

55 Series - Inline Reaction Bar Nutrunner - Lever Start - Collar Reverse

Heavy-duty Cleco motor is the industry standard for reliability

45 & 55 Model Number Example

- Heavy-duty Cleco motor is the industry standard for reliability
- Durable Clecomatic Clutch delivers best-in-class torque repeatability and long calibration cycle
- Planetary gears designed for tool speed changes with minimal parts service and replacement
- Heavy-duty spindle bearings and splined retractable spindles reduces friction, improves torque repeatability, and prolongs life.

Series
45, 55

Rotation
N-Non Reversible
R-Reversible

Nutrunner

Torque Control
A – Clecomatic
– – Stall

Start Type
L – Lever
B – Button

Gear Train
2, 3, 4, 6

Sq. Drive
3 – 3/8”
4 – 1/2”

MODEL	TORQUE RANGE				FREE SPEED	LENGTH	WEIGHT		OUTPUT DRIVE	AIR CONSUMPTION	AIR INLET SIZE
	MIN NM	MAX NM	MIN FT LB	MAX FT LB	R/MIN	IN	LB	KG		SCFM	IN
55RNAL-2-4	46.0	91.0	30.0	67.0	270	16.1	6.5	2.95	1/2 SQUARE DRIVE	55	1/2
55RNAL-3-4	34.0	69.0	25.0	51.0	370	16.1	6.5	2.95	1/2 SQUARE DRIVE	55	1/2

General: Tool performance rated at 90 psi (620kPa) air pressure
Standard Equipment:
Operating instructions & service manual
Aluminum Torque Reaction Bar
Optional Equipment:
Steel Torque Reaction Bar: 869770

19 Series - Inline - Push-to-Start - Push Button Reverse

Durable Clecomatic Clutch delivers best-in-class torque repeatability and long calibration cycle

Cleco 19 Series Inline

- Durable Clecomatic Clutch delivers best-in-class torque repeatability and long calibration cycle
- Lightweight, ergonomic and durable handle designed with operator in mind
- Engineered to suit a wide range of applications, from fast-paced assembly to aerospace
- Grip material tested to withstand a range of industrial chemicals

Series
19

Tool Type
S – Rev. Screwdriver
B – Pushbutton Reverse

Handle
P – Inline (Push-to-Start)
P – "P" Handle Pistol
C – "T" Handle Pistol
C – Combination (Lever/ Push-to-Start)

Torque Control Mechanism
A – Clecomatic Clutch
S – Stall

Output Drive
Q – Quick Change
B – Bit & Finder

Maximum Torque

SPA Models	BPA Models
02 2.1 Nm	**02** 1.6 Nm
03 2.9 Nm	**03** 2.1 Nm
04 4.5 Nm	**04** 3.7 Nm
05 5.0 Nm	**05** 5.1 Nm
06 5.1 Nm	**06** 5.1 Nm

MODEL	TORQUE RANGE				FREE SPEED	LENGTH	WEIGHT		OUTPUT DRIVE	AIR CONSUMPTION	AIR INLET SIZE
	MIN NM	MAX NM	MIN FT LB	MAX FT LB	R/MIN	IN	LB	KG		SCFM	IN
19BPA02Q	0.6	2.1	3	19	2300	9.3	1.41	0.64	1/4" QUICK CHANGE	11.0	1/8
19BPA03B	0.6	2.9	0.4	2.1	2300	9.9	1.41	0.64	BIT & FINDER	11.0	1/8
19BPA03Q	0.6	2.9	3	26	1600	9.3	1.41	0.64	1/4" QUICK CHANGE	11.0	1/8
19BPA04B	1.1	4.5	0.8	3.3	1600	9.9	1.41	0.64	BIT & FINDER	11.0	1/8
19BPA04Q	1.1	4.5	3	40	920	9.1	1.30	0.59	1/4" QUICK CHANGE	11.0	1/8
19BPA05B	1.1	5.1	0.8	3.7	920	9.9	1.30	0.59	BIT & FINDER	11.0	1/8
19BPA05Q	1.1	5.1	3	45	560	9.5	1.50	0.68	1/4" QUICK CHANGE	11.0	1/8
19BPA06B	1.1	5.1	0.8	3.7	560	9.9	1.50	0.68	BIT & FINDER	11.0	1/8
19BPA06Q	1.1	5.1	3	45	220	9.5	1.50	0.68	1/4" QUICK CHANGE	11.0	1/8

General: 90 psi (620kPa) required for maximum rated torque.
Standard Equipment: Operating instructions & service manual
Suspension bail
All torque springs required to meet indicated torque.
Lever Push-to-Start models include kit to convert to lever only. (301409)

19 Series - Inline - Push-to-Start - Collar Reverse

Durable Clecomatic Clutch delivers best-in-class torque repeatability and long calibration cycle

Cleco 19 Series Inline

- Durable Clecomatic Clutch delivers best-in-class torque repeatability and long calibration cycle
- Lightweight, ergonomic and durable handle designed with operator in mind
- Engineered to suit a wide range of applications, from fast-paced assembly to aerospace
- Grip material tested to withstand a range of industrial chemicals

Series
19

Tool Type
S – Rev. Screwdriver
B – Pushbutton Reverse

Handle
P – Inline (Push-to-Start)
P – "P" Handle Pistol
C – "T" Handle Pistol
C – Combination (Lever/ Push-to-Start)

Torque Control Mechanism
A – Clecomatic Clutch
S – Stall

Output Drive
Q – Quick Change
B – Bit & Finder

Maximum Torque

SPA Models	BPA Models
02 2.1 Nm	**02** 1.6 Nm
03 2.9 Nm	**03** 2.1 Nm
04 4.5 Nm	**04** 3.7 Nm
05 5.0 Nm	**05** 5.1 Nm
06 5.1 Nm	**06** 5.1 Nm

MODEL	TORQUE RANGE				FREE SPEED	LENGTH	WEIGHT		OUTPUT DRIVE	AIR CONSUMPTION	AIR INLET SIZE
	MIN NM	MAX NM	MIN FT LB	MAX FT LB	R/MIN	IN	LB	KG		SCFM	IN
19SPA02B	0.6	2.1	3	19	2800	9.7	1.41	0.64	BIT & FINDER	11.0	1/8
19SPA02Q	0.6	2.1	3	19	2800	9.1	1.41	0.64	1/4" QUICK CHANGE	11.0	1/8
19SPA03B	0.6	2.9	3	26	1900	9.9	1.41	0.64	BIT & FINDER	11.0	1/8
19SPA03Q	0.6	2.9	3	26	1900	9.3	1.41	0.64	1/4" QUICK CHANGE	11.0	1/8
19SPA04B	1.1	4.5	3	40	1100	9.7	1.30	0.59	BIT & FINDER	11.0	1/8
19SPA04Q	1.1	4.5	3	40	1100	9.1	1.30	0.59	1/4" QUICK CHANGE	11.0	1/8
19SPA05B	1.1	5.1	3	45	660	10.1	1.50	0.68	BIT & FINDER	11.0	1/8
19SPA05Q	1.1	5.1	3	45	660	9.5	1.50	0.68	1/4" QUICK CHANGE	11.0	1/8
19SPA06Q	1.1	5.1	3	45	260	9.5	1.50	0.68	1/4" QUICK CHANGE	11.0	1/8

General: 90 psi (620kPa) required for maximum rated torque.
Standard Equipment: Operating instructions & service manual
Suspension bail
All torque springs required to meet indicated torque.
Lever Push-to-Start models include kit to convert to lever only. (301409)

19 Series - Inline - Push and Lever Start - Collar Reverse

Durable Clecomatic Clutch delivers best-in-class torque repeatability and long calibration cycle

Cleco 19 Series Inline

- Durable Clecomatic Clutch delivers best-in-class torque repeatability and long calibration cycle
- Lightweight, ergonomic and durable handle designed with operator in mind
- Engineered to suit a wide range of applications, from fast-paced assembly to aerospace
- Grip material tested to withstand a range of industrial chemicals

Series
19

Tool Type
S – Rev. Screwdriver
B – Pushbutton Reverse

Handle
P – Inline (Push-to-Start)
P – "P" Handle Pistol
C – "T" Handle Pistol
C – Combination (Lever/ Push-to-Start)

Torque Control Mechanism
A – Clecomatic Clutch
S – Stall

Output Drive
Q – Quick Change
B – Bit & Finder

Maximum Torque

SPA Models	BPA Models
02 2.1 Nm	**02** 1.6 Nm
03 2.9 Nm	**03** 2.1 Nm
04 4.5 Nm	**04** 3.7 Nm
05 5.0 Nm	**05** 5.1 Nm
06 5.1 Nm	**06** 5.1 Nm

MODEL	TORQUE RANGE				FREE SPEED	LENGTH	WEIGHT		OUTPUT DRIVE	AIR CONSUMPTION	AIR INLET SIZE
	MIN NM	MAX NM	MIN FT LB	MAX FT LB	R/MIN	IN	LB	KG		SCFM	IN
19SCA02Q	0.6	2.1	3	19	2800	9.8	1.50	0.68	1/4" QUICK CHANGE	11.0	1/8
19SCA03Q	0.6	2.9	3	26	1900	10.0	1.50	0.68	1/4" QUICK CHANGE	11.0	1/8
19SCA04Q	1.1	4.5	3	40	1100	9.8	1.50	0.68	1/4" QUICK CHANGE	11.0	1/8
19SCA05Q	1.1	5.1	3	45	660	10.2	1.61	0.73	1/4" QUICK CHANGE	11.0	1/8
19SCA06Q	1.1	5.1	3	45	260	10.2	1.61	0.73	1/4" QUICK CHANGE	11.0	1/8

General: 90 psi (620kPa) required for maximum rated torque.
Standard Equipment: Operating instructions & service manual
Suspension bail
All torque springs required to meet indicated torque.
Lever Push-to-Start models include kit to convert to lever only. (301409)

8 Series - Inline - Push-to-Start - Push Button Reverse

Compact design increases productivity, saves weight, and is easy to integrate into any assembly environment

- Compact design increases productivity, saves weight, and is easy to integrate into any assembly environment
- Dependable Clecomatic clutch delivers consistent torque accuracy and repeatability
- Cleco motor is the industry standard for durability
- Easy to repair and maintain, with high parts interchangeability to other Cleco products

MODEL	TORQUE RANGE				FREE SPEED	LENGTH	WEIGHT		SIDE TO CENTER	OUTPUT DRIVE	AIR CONSUMPTION	AIR INLET SIZE
	MIN NM	MAX NM	MIN FT LB	MAX FT LB	R/MIN	IN	LB	KG	IN		SCFM	IN
8RSA-40BQ	0.8	2.8	0.5	2	3200	8.9	2.12	0.96	0.77	1/4" HEX QUICK CHANGE	19.1	1/4
8RSA-30BQ	0.8	3.4	0.5	2.5	2500	8.9	2.12	0.96	0.77	1/4" HEX QUICK CHANGE	19.1	1/4
8RSA-20	0.8	4.5	0.5	3.3	1800	9.5	2.12	0.96	0.77	BIT & FINDER	19.1	1/4
8RSA-20BQ	0.8	4.5	0.5	3.3	1800	8.9	2.12	0.96	0.77	1/4" HEX QUICK CHANGE	19.1	1/4
8RSA-10	0.8	7.3	0.5	5.3	800	10.2	2.38	1.08	0.77	BIT & FINDER	19.1	1/4
8RSA-10BQ	0.8	7.3	0.5	5.3	800	9.6	2.38	1.08	0.77	1/4" HEX QUICK CHANGE	19.1	1/4
8RSA-5BQ	0.8	8.5	0.5	6.2	400	9.6	2.38	1.08	0.77	1/4" HEX QUICK CHANGE	19.1	1/4
8RSA-7BQ	0.8	8.5	0.5	6.2	550	9.6	2.38	1.08	0.77	1/4" HEX QUICK CHANGE	19.1	1/4

General: 90 psi (620kPa) required for maximum rated torque.
Length and weight of finder type tools includes standard length bit & finder.
Weight does not include dead handle.
Standard Equipment:
Operating instructions & service manual
Suspension bail
Dead handle on models above 100 in lbs torque cap.
All torque springs required to meet indicated torque
Standard Equipment if Specified:
One bit, finder, and finder spring (bit & finder models)
Grip Sleeve (202346; Push-to-Start models only)
Dead handle (861006)

88 Series - Inline - Push and Lever Start - Push Button Reverse

Compact design increases productivity, saves weight, and is easy to integrate into any assembly environment

- Compact design increases productivity, saves weight, and is easy to integrate into any assembly environment
- Dependable Clecomatic clutch delivers consistent torque accuracy and repeatability
- Cleco motor is the industry standard for durability
- Easy to repair and maintain, with high parts interchangeability to other Cleco products

MODEL	TORQUE RANGE				FREE SPEED	LENGTH	WEIGHT		OUTPUT DRIVE	AIR CONSUMPTION	AIR INLET SIZE
	MIN NM	MAX NM	MIN FT LB	MAX FT LB	R/MIN	IN	LB	KG		SCFM	IN
88RSAL-5C-3	1.7	18	1.2	13.2	400	11.1	3.11	1.41	3/8 SQUARE DRIVE	19.1	1/4
88RSAL-5CQ	1.7	18	1.2	13.2	400	11.1	3.11	1.41	1/4 QUICK CHANGE	19.1	1/4

General: 90 psi (620kPa) required for maximum rated torque.
Length and weight of finder type tools includes standard length bit & finder.
Weight does not include dead handle.
Standard Equipment:
Operating instructions & service manual
Suspension bail
Dead handle on models above 100 in lbs torque cap.
All torque springs required to meet indicated torque
Standard Equipment if Specified:
One bit, finder, and finder spring (bit & finder models)
Grip Sleeve (202346; Push-to-Start models only)
Dead handle (861006)

88 Series - Inline - Push-to-Start - Push Button Reverse

Compact design increases productivity, saves weight, and is easy to integrate into any assembly environment

- Compact design increases productivity, saves weight, and is easy to integrate into any assembly environment
- Dependable Clecomatic clutch delivers consistent torque accuracy and repeatability
- Cleco motor is the industry standard for durability
- Easy to repair and maintain, with high parts interchangeability to other Cleco products

MODEL	TORQUE RANGE				FREE SPEED	LENGTH	WEIGHT		SIDE TO CENTER	OUTPUT DRIVE	AIR CONSUMPTION	AIR INLET SIZE
	MIN NM	MAX NM	MIN FT LB	MAX FT LB	R/MIN	IN	LB	KG	IN		SCFM	IN
88RSA-7C-3	1.7	10	1.2	7.3	550	9.5	2.62	1.19	0.77	3/8" SQUARE DRIVE	19.1	1/4
88RSA-5C-3	1.7	18	1.2	13.2	400	9.5	2.62	1.19	0.77	3/8" SQUARE DRIVE	19.1	1/4
88RSA-5CQ	1.7	18	1.2	13.2	400	9.5	2.62	1.19	0.77	1/4" HEX QUICK CHANGE	19.1	1/4
88RSA-7CQ	1.7	10	1.2	7.3	550	9.5	2.62	1.19	0.77	1/4" HEX QUICK CHANGE	19.1	1/4

General: 90 psi (620kPa) required for maximum rated torque.
Length and weight of finder type tools includes standard length bit & finder.
Weight does not include dead handle.
Standard Equipment:
Operating instructions & service manual
Suspension bail
Dead handle on models above 100 in lbs torque cap.
All torque springs required to meet indicated torque
Standard Equipment if Specified:
One bit, finder, and finder spring (bit & finder models)
Grip Sleeve (202346; Push-to-Start models only)
Dead handle (861006)

19 Series - Pistol Grip - “T” Handle - Push and Trigger Start

Durable Clecomatic Clutch delivers best-in-class torque repeatability and long calibration cycle

- Durable Clecomatic Clutch delivers best-in-class torque repeatability and long calibration cycle
- 2 grip sizes available for added versatility
- Reverse lever can be rotated to accommodate left-or-right-handed operators
- Engineered to suit a wide range of applications, from fast-paced assembly to aerospace

MODEL	TORQUE RANGE				FREE SPEED	LENGTH	WEIGHT		AIR CONSUMPTION	AIR INLET SIZE
	MIN NM	MAX NM	MIN FT LB	MAX FT LB	R/MIN	IN	LB	KG	SCFM	IN
19TCA02Q	0.6	2.1	0.4	1.5	2800	8.0	1.43	0.65	11.0	1/4
19TCA03Q	0.6	2.9	0.4	2.1	1900	8.2	1.54	0.7	11.0	1/4
19TCA04Q	1.1	4.5	0.8	3.3	1100	8.0	1.54	0.7	11.0	1/4
19TCA05Q	1.1	5.1	0.8	3.7	660	8.4	1.54	0.7	11.0	1/4
19TCA06Q	1.1	5.1	0.8	3.7	260	8.4	1.54	0.7	11.0	1/4
19TCA07Q	1.7	6.8	1.2	5	660	8.4	1.54	0.7	11.0	1/4
19TCA09Q	1.7	8.9	1.2	6.5	470	9.3	1.72	0.78	11.0	1/4

General: 90 psi (620kPa) required for maximum rated torque.
Standard Equipment: Operating instructions & service manual
Suspension bail
All torque springs required to meet indicated torque.
Lever Push-to-Start models include kit to convert to lever only. (301409)

19 Series - Pistol Grip - “T” Handle - Trigger Start

Durable Clecomatic Clutch delivers best-in-class torque repeatability and long calibration cycle

- Durable Clecomatic Clutch delivers best-in-class torque repeatability and long calibration cycle
- 2 grip sizes available for added versatility
- Reverse lever can be rotated to accommodate left-or-right-handed operators
- Engineered to suit a wide range of applications, from fast-paced assembly to aerospace

MODEL	TORQUE RANGE				FREE SPEED	LENGTH	WEIGHT		AIR CONSUMPTION	AIR INLET SIZE
	MIN NM	MAX NM	MIN FT LB	MAX FT LB	R/MIN	IN	LB	KG	SCFM	IN
19TTA02Q	0.6	2.1	0.4	1.5	2800	7.9	1.43	0.65	11.0	1/4
19TTA03Q	0.6	2.9	0.4	2.1	1900	8.1	1.54	0.7	11.0	1/4
19TTA04Q	1.1	4.5	0.8	3.3	1100	7.9	1.54	0.7	11.0	1/4
19TTA05Q	1.1	5.1	0.8	3.7	660	8.3	1.54	0.7	11.0	1/4
19TTA06Q	1.1	5.1	0.8	3.7	260	8.3	1.54	0.7	11.0	1/4
19TTA07Q	1.7	6.8	1.2	5	660	8.3	1.54	0.7	11.0	1/4
19TTA09Q	1.7	8.9	1.2	6.5	470	9.3	1.72	0.78	11.0	1/4
19TTA15Q	5.1	14.7	3.7	10.8	260	9.6	1.94	0.88	11.0	1/4

All pistol tools have 1/4” NPT inlet with minimum hose ID recommended at 3/8” (10mm).
Air consumption of pistol tools rated at 11 SCFM.
All performance specifications measured at 90PSI (6.2Bar).
Includes all springs needed for coverage of advertised torque range. Includes suspension bail.
Optional Equipment:
Torque Signal Kit: 302021PT (Trigger w/Clecomatic clutch only)
Overhose: 207107
Push-only Conversion Kit: 301121

19 Series - Pistol Grip - “P” Handle - Push and Trigger Start

Durable Clecomatic Clutch delivers best-in-class torque repeatability and long calibration cycle

- Durable Clecomatic Clutch delivers best-in-class torque repeatability and long calibration cycle
- 2 grip sizes available for added versatility
- Reverse lever can be rotated to accommodate left-or-right-handed operators
- Engineered to suit a wide range of applications, from fast-paced assembly to aerospace

MODEL	TORQUE RANGE				FREE SPEED	LENGTH	WEIGHT		AIR CONSUMPTION	AIR INLET SIZE
	MIN NM	MAX NM	MIN FT LB	MAX FT LB	R/MIN	IN	LB	KG	SCFM	IN
19PCA02Q	0.6	2.1	0.4	1.5	2800	8.1	1.43	0.65	11.0	1/4
19PCA03Q	0.6	2.9	0.4	2.1	1900	8.3	1.50	0.68	11.0	1/4
19PCA04Q	1.1	4.5	0.8	3.3	1100	8.1	1.41	0.64	11.0	1/4
19PCA05Q	1.1	5.1	0.8	3.7	660	8.5	1.50	0.68	11.0	1/4
19PCA06Q	1.1	5.1	0.8	3.7	260	8.5	1.50	0.68	11.0	1/4
19PCA07Q	1.7	6.8	1.2	5	660	8.5	1.50	0.68	11.0	1/4
19PCA09Q	1.7	8.9	1.2	6.5	470	9.8	1.65	0.75	11.0	1/4

General:Tool performance rated at 90 psi (620kPa) air pressure.
Standard Equipment:
Operating instructions & service manual
Suspension bail
Dead handle on models above 100 in .-lbs torque cap.
All torque springs required to meet indicated torque specification
Optional Equipment:
Torque Signal Kit: 302021PT (Trigger w/Clecomatic clutch only)

19 Series - Pistol Grip - “P” Handle - Trigger Start

Durable Clecomatic Clutch delivers best-in-class torque repeatability and long calibration cycle

- Durable Clecomatic Clutch delivers best-in-class torque repeatability and long calibration cycle
- 2 grip sizes available for added versatility
- Reverse lever can be rotated to accommodate left-or-right-handed operators
- Engineered to suit a wide range of applications, from fast-paced assembly to aerospace

MODEL	TORQUE RANGE				FREE SPEED	LENGTH	WEIGHT		AIR CONSUMPTION	AIR INLET SIZE
	MIN NM	MAX NM	MIN FT LB	MAX FT LB	R/MIN	IN	LB	KG	SCFM	IN
19PTA02Q	0.6	2.1	0.4	1.5	2800	8.0	1.41	0.64	11.0	1/4
19PTA03Q	0.6	2.9	0.4	2.1	1900	8.2	1.50	0.68	11.0	1/4
19PTA04Q	1.1	4.5	0.8	3.3	1100	8.0	1.41	0.64	11.0	1/4
19PTA05Q	1.1	5.1	0.8	3.7	660	8.4	1.50	0.68	11.0	1/4
19PTA06Q	1.1	5.1	0.8	3.7	260	8.4	1.50	0.68	11.0	1/4
19PTA07Q	1.7	6.8	1.2	5	660	8.4	1.50	0.68	11.0	1/4
19PTA09Q	1.7	8.9	1.2	6.5	470	9.8	1.65	0.75	11.0	1/4
19PTA15Q	5.1	14.7	3.7	10.8	260	9.7	1.92	0.87	11.0	1/4

General:Tool performance rated at 90 psi (620kPa) air pressure.
Standard Equipment:
Operating instructions & service manual
Suspension bail
Dead handle on models above 100 in .-lbs torque cap.
All torque springs required to meet indicated torque specification
Optional Equipment:
Torque Signal Kit: 302021PT (Trigger w/Clecomatic clutch only)

19 Series - Pistol Grip - Stall - “T” Handle - Trigger Start

1/4” hex quick change drive

- 1/4” hex quick change drive
- Trigger Start
- ”T” style handle
- 2 interchangeable soft-touch grip sizes
- Adjustable reverse lever for true one-hand left or right operation

MODEL	TORQUE RANGE				FREE SPEED	LENGTH	WEIGHT		AIR CONSUMPTION	AIR INLET SIZE
	MIN NM	MAX NM	MIN FT LB	MAX FT LB	R/MIN	IN	LB	KG	SCFM	IN
19TTS02Q	0	2.1	0	1.5	2800	5.8	1.19	0.54	11.0	1/4
19TTS03Q	0	2.9	0	2.1	1900	6.1	1.19	0.54	11.0	1/4
19TTS04Q	0	4.5	0	3.3	1100	5.8	1.19	0.54	11.0	1/4
19TTS05Q	0	5.1	0	3.7	660	6.1	1.19	0.54	11.0	1/4

General: Tool performance rated at 90 psi (620kPa).
Standard Equipment:
Operating instructions & service manual
Suspension bail
All torque springs required to meet indicated torque
Dead handle on all models above 100 in lbs torque
Standard Equipment if Specified:
Dead handle (861006; 8 series models)

19 Series - Pistol Grip - Stall - “P” Handle - Trigger Start

1/4” hex quick change drive

- 1/4” hex quick change drive
- Trigger Start
- ”P” style handle
- 2 interchangeable soft-touch grip sizes
- Adjustable reverse lever for true one-hand left or right operation

MODEL	TORQUE RANGE				FREE SPEED	LENGTH	WEIGHT		AIR CONSUMPTION	AIR INLET SIZE
	MIN NM	MAX NM	MIN FT LB	MAX FT LB	R/MIN	IN	LB	KG	SCFM	IN
19PTS02Q	0	2.1	0	1.5	2800	5.9	1.17	0.53	11.0	1/4
19PTS03Q	0	2.9	0	2.1	1900	6.1	1.17	0.53	11.0	1/4
19PTS04Q	0	4.5	0	3.3	1100	5.9	1.17	0.53	11.0	1/4
19PTS05Q	0	5.1	0	3.7	660	6.1	1.17	0.53	11.0	1/4

General: Tool performance rated at 90 psi (620kPa).
Standard Equipment:
Operating instructions & service manual
Suspension bail
All torque springs required to meet indicated torque
Dead handle on all models above 100 in lbs torque
Standard Equipment if Specified:
Dead handle (861006; 8 series models)

64 Series - Pistol Grip - Swingbar Nutrunner - Trigger Start - Reversible

High power-to-weight ratio and slim profile nose delivers more torque to hard-to-reach joints

- High power-to-weight ratio and slim profile nose delivers more torque to hard-to-reach joints
- Heavy-duty gearing is designed to withstand high torque output
- Top and bottom air inlets adds versitility in manufacturing
- Light weight with soft-touch handle for improved ergonomics

64 Model Number Example

Series
64
Tool Style
T – T-Handle Pistol
Tool Type
T – "T" Handle Pistol
Options
S – Stall
K – Selectork
Maximum Torque (Nm)
Tool Termination
D – Direct Drive
Output Drive
4 – 1/2" **8** – 1"
6 – 3/4" **12** – 1 1/2"

MODEL	TORQUE RANGE				FREE SPEED	LENGTH	WEIGHT		OUTPUT DRIVE	AIR CONSUMPTION	AIR INLET SIZE
	MIN NM	MAX NM	MIN FT LB	MAX FT LB	R/MIN	IN	LB	KG		SCFM	IN
64TTK75D4	56.0	75.0	41.0	55.0	340	11.5	6.3	2.86	1/2 SQUARE DRIVE	60	3/8
64TTS110D4	83.0	110.0	61.0	81.0	225	11.5	6.3	2.86	1/2 SQUARE DRIVE	60	3/8
64TTS140D4	105.0	140.0	77.0	103.0	180	11.5	6.3	2.86	1/2 SQUARE DRIVE	60	3/8
64TTK150D6	113.0	150.0	83.0	111.0	160	12.5	8.2	3.72	3/4 SQUARE DRIVE	60	3/8
64TTS150D6	113.0	150.0	83.0	111.0	160	12.5	8.2	3.72	3/4 SQUARE DRIVE	60	3/8
64TTS175D6	131.0	175.0	97.0	129.0	135	12.5	8.2	3.72	3/4 SQUARE DRIVE	60	3/8
64TTK205D6	153.0	205.0	113.0	151.0	115	12.5	8.2	3.72	3/4 SQUARE DRIVE	60	3/8
64TTS205D6	154.0	205.0	113.0	151.0	115	12.5	8.2	3.72	3/4 SQUARE DRIVE	60	3/8
64TTS255D6	191.0	255.0	141.0	188.0	95	12.5	8.2	3.72	3/4 SQUARE DRIVE	60	3/8
64TTK345D6	259.0	345.0	191.0	254.0	70	12.5	8.2	3.72	3/4 SQUARE DRIVE	60	3/8
64TTS345D6	259.0	345.0	191.0	254.0	70	12.5	8.2	3.72	3/4 SQUARE DRIVE	60	3/8
64TTK425D6	319.0	425.0	235.0	313.0	55	12.5	8.2	3.72	3/4 SQUARE DRIVE	60	3/8
64TTK570D6	428.0	570.0	315.0	420.0	42	13.0	8.6	3.9	3/4 SQUARE DRIVE	60	3/8
64TTS570D6	428.0	570.0	315.0	420.0	42	13.0	8.6	3.9	3/4 SQUARE DRIVE	60	3/8
64TTS640D8	480.0	640.0	354.0	472.0	32	15.9	14.5	6.58	1 SQUARE DRIVE	60	3/8
64TTS1260D8	945.0	1260	697.0	930.0	16	15.9	14.5	6.58	1 SQUARE DRIVE	60	3/8
64TTS90D4	68.0	90.0	50.0	66.0	270	11.5	6.3	2.86	1/2 SQUARE DRIVE	60	3/8

General: Tool performance rated at 90 psi (620kPa) air pressure.
Standard Equipment: Operating instructions & service manual
Aluminum Torque Reaction Bar
Steel Torque Reaction Bar (tools rated above 50 ft. lbs)
Slave Square Drive (64TTS3850D12 & 64TTK3850D12)

88 Series - Pistol Grip - Trigger Start - Sliding Knob Reverse

Compact design increases productivity, saves weight, and is easy to integrate into any assembly environment

- Compact design increases productivity, saves weight, and is easy to integrate into any assembly environment
- Dependable Clecomatic clutch delivers consistent torque accuracy and repeatability
- Cleco motor is the industry standard for durability
- Easy to repair and maintain, with high parts interchangeability to other Cleco products

MODEL	TORQUE RANGE				FREE SPEED	LENGTH	WEIGHT		SIDE TO CENTER	OUTPUT DRIVE	AIR CONSUMPTION	AIR INLET SIZE
	MIN NM	MAX NM	MIN FT LB	MAX FT LB	R/MIN	IN	LB	KG	IN		SCFM	IN
88RSATP-7C-3	1.7	10	1.2	7.3	550	8.9	3.13	1.42	0.81	3/8" SQUARE DRIVE	19.1	1/4
88RSATP-5C-3	1.7	18	1.2	13.2	400	8.9	3.13	1.42	0.81	3/8" SQUARE DRIVE	19.1	1/4
88RSATP-5CQ	1.7	18	1.2	13.2	400	8.9	3.13	1.42	0.81	1/4" HEX QUICK CHANGE	19.1	1/4
88RSATP-2C-3	1.7	20	1.2	14.7	200	9.6	3.37	1.53	0.81	3/8" SQUARE DRIVE	19.1	1/4
88RSATP-2CQ	1.7	20	1.2	14.7	200	9.6	3.37	1.53	0.81	1/4" HEX QUICK CHANGE	19.1	1/4
88RSATP-7CQ	1.7	10	1.2	7.3	550	8.9	3.13	1.42	0.81	1/4" HEX QUICK CHANGE	19.1	1/4

General: Tool performance rated at 90 psi (620kPa).
Standard Equipment:
Operating instructions & service manual
Suspension bail
All torque springs required to meet indicated torque
Dead handle on all models above 100 in lbs torque
Standard Equipment if Specified:
Dead handle (861006; 8 series models)

88 Series - Pistol Grip - Push and Trigger Start - Sliding Knob Reverse

Compact design increases productivity, saves weight, and is easy to integrate into any assembly environment

- Compact design increases productivity, saves weight, and is easy to integrate into any assembly environment
- Dependable Clecomatic clutch delivers consistent torque accuracy and repeatability
- Cleco motor is the industry standard for durability
- Easy to repair and maintain, with high parts interchangeability to other Cleco products

MODEL	TORQUE RANGE				FREE SPEED	LENGTH	WEIGHT		SIDE TO CENTER	OUTPUT DRIVE	AIR CONSUMPTION	AIR INLET SIZE
	MIN NM	MAX NM	MIN FT LB	MAX FT LB	R/MIN	IN	LB	KG	IN		SCFM	IN
88RSAPT-5C-3	1.7	18	1.2	13.2	400	9.0	3.13	1.42	0.81	3/8" SQUARE DRIVE	19.1	1/4
88RSAPT-5CQ	1.7	18	1.2	13.2	400	9.0	3.13	1.42	0.81	1/4" QUICK CHANGE	19.1	1/4
88RSAPT-2CQ	1.7	20	1.2	14.7	200	9.8	3.37	1.53	0.81	1/4" QUICK CHANGE	19.1	1/4
88RSAPT-7CQ	1.7	10	1.2	7.3	550	9.0	3.13	1.42	0.81	1/4" QUICK CHANGE	19.1	1/4

General: Tool performance rated at 90 psi (620kPa).
Standard Equipment:
Operating instructions & service manual
Suspension bail
All torque springs required to meet indicated torque
Dead handle on all models above 100 in lbs torque
Standard Equipment if Specified:
Dead handle (861006; 8 series models)

MP Series - Positive Clutch Screwdrivers

Great for soft draw applications such as wood or aluminum

- Great for soft draw applications such as wood or aluminum
- One-hand forward reverse switch
- Rugged metal housing and components outlasts the competition
- Efficient and balanced design maximizes accessibility while minimizing operator fatigue

MODEL	TORQUE RANGE				FREE SPEED	LENGTH	WEIGHT		AIR CONSUMPTION	AIR INLET SIZE
	MIN NM	MAX NM	MIN FT LB	MAX FT LB	R/MIN	IN	LB	KG	SCFM	IN
MP2464	1.1	8.5	0.8	6.2	2800	6.8	2.43	1.1	22.0	1/4
MP2465	1.1	11.3	0.8	8.3	1800	6.8	2.43	1.1	22.0	1/4
MP2466	1.1	15.8	0.8	11.6	1100	8.1	3.09	1.4	22.0	1/4

MP Series - Adjustable Clutch Screwdrivers

Clutch shut-off adjusted by spring force

- Clutch shut-off adjusted by spring force
- One-hand forward reverse switch
- Rugged metal housing and components outlasts the competition
- Efficient and balanced design maximizes accessibility while minimizing operator fatigue

MODEL	TORQUE RANGE				FREE SPEED	LENGTH	WEIGHT		AIR CONSUMPTION	AIR INLET SIZE
	MIN NM	MAX NM	MIN FT LB	MAX FT LB	R/MIN	IN	LB	KG	SCFM	IN
MP2476	1.4	8.5	1	6.2	2800	8.5	2.87	1.3	22.0	1/4
MP2477	3.4	11.3	2.5	8.3	1800	7.8	2.65	1.2	22.0	1/4
MP2478	1.9	15.8	1.4	11.6	1100	9.1	3.31	1.5	22.0	1/4

General:
Air Inlet 1/4" NPT
Use 1/4" (6.4 mm) I.D. hose
All tools performance rated @ 90psi (620 kPa) air pressure.
Standard Equipment:
Suspension bail (lever style only)
Clutch adjustment wrenches
Owners Manual
Parts Sheet
Standard Clutch Spring
9111500 MP2476
8620800 MP2478
Optional Accessories:
60538 Master Guard oil (4 oz.)
60539 Master Guard oil (1 qt.)
63593 8' Hose Whip 1/4" I.D.
22034 Hose Line Oiler

MP Series - Versa Clutch Screwdrivers

Ideal “all-purpose” industrial screwdriver

- Ideal “all-purpose” industrial screwdriver
- One-hand forward reverse switch
- Rugged metal housing and components outlasts the competition
- Efficient and balanced design maximizes accessibility while minimizing operator fatigue

MODEL	TORQUE RANGE				FREE SPEED	LENGTH	WEIGHT		AIR CONSUMPTION	AIR INLET SIZE
	MIN NM	MAX NM	MIN FT LB	MAX FT LB	R/MIN	IN	LB	KG	SCFM	IN
MP2436	0.6	11.3	0.4	8.3	1800	7.8	2.65	1.2	22.0	1/4
MP2437	0.6	15.8	0.4	11.6	1100	9.1	3.31	1.5	22.0	1/4

General:
Air Inlet 1/4” NPT
Use 1/4” (6.4 mm) I.D. hose
All tools performance rated @ 90psi (620 kPa) air pressure.
Standard Equipment:
Owners Manual
Parts Sheet
Optional Accessories:
60538 Master Guard oil (4 oz.)
60539 Master Guard oil (1 qt.)
63593 8’ Hose Whip 1/4” I.D.
22034 Hose Line Oiler

MP Series - Direct Drive Screwdrivers

Ideal “all-purpose” industrial screwdriver

- Torque is set by adjusting air pressure
- One-hand forward reverse switch
- Rugged metal housing and components outlasts the competition
- Efficient and balanced design maximizes accessibility while minimizing operator fatigue

MODEL	TORQUE RANGE				FREE SPEED	LENGTH	WEIGHT		AIR CONSUMPTION	AIR INLET SIZE
	MIN NM	MAX NM	MIN FT LB	MAX FT LB	R/MIN	IN	LB	KG	SCFM	IN
MP2452	1.1	7.3	0.8	5.3	2800	5.7	2.18	0.99	22.0	1/4
MP2453	1.1	8.5	0.8	6.2	1800	5.7	2.18	0.99	22.0	1/4
MP2454	1.1	13.6	0.8	10	1100	7.0	2.87	1.3	22.0	1/4

General:
Air Inlet 1/4” NPT
Use 1/4” (6.4 mm) I.D. hose
All tools performance rated @ 90psi (620 kPa) air pressure.
Standard Equipment:
Owners Manual
Parts Sheet
Optional Accessories:
60538 Master Guard oil (4 oz.)
60539 Master Guard oil (1 qt.)
63593 8’ Hose Whip 1/4” I.D.
22034 Hose Line Oiler

Known for durability Trusted for quality

The ultimate automated tightening solutions.

Cleco DGD™ Intelligent Spindles are the exclusive fixtured assembly solution, combining reduced floor space, fewer cables and high-speed uptime availability for automated fastening applications. Intelligent spindles provide a wide range of torque capability and industry-leading free speeds.

Reduce your via our exclusive intelligent spindle cabling technology.

When you're looking to run robotic tightening applications, look to Cleco DGD intelligent spindle solutions. By utilizing our exclusive daisy-chain connectors, we offer the only solution in the industry that enables you to run multiple spindles using a daisy-chained cable solution. This results in reduced system complexity, simple cable management and smaller pay-load capacity.

Same cell, same robot: an industry first.

Combining Cleco DGD Intelligent Spindles and daisy-chain connectors with our patented Intelli-Swap system technology, plus an automatic, intelligent tool changer enables your system to rapidly switch from one group of spindles to another using the same controller. Cleco DGD solutions enable you to effortlessly manage multiple applications in a single cell.

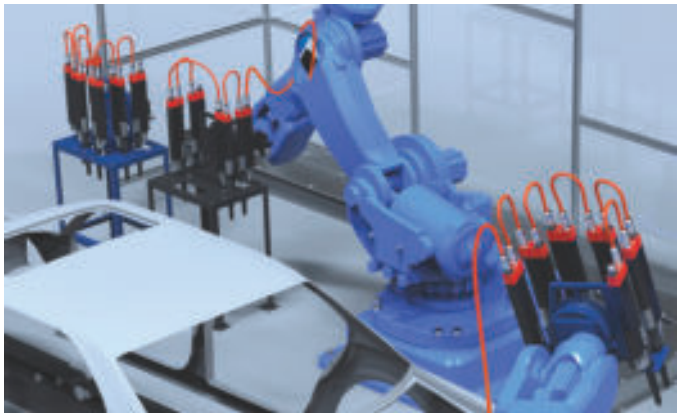

Intelligent Spindle - BTS Size 1-4 (2-1600 Nm) - Straight Drive - Single Torque Transducer - Angle Encoder

On board servo module, Patented daisy chain, Torque transducer, Angle Encoder, modular consutuction

- Long Service Life, Maximum Precision, High Accuracy, World class free speed, On-Board trouble shooting
- Floating adapter not included with spindle

MODEL	TORQUE RANGE				FREE SPEED	FLOAT	DRIVE TYPE	MIN CENTER TO CENTER	WEIGHT		LENGTH	LENGTH
	MIN NM	MAX NM	MIN FT LB	MAX FT LB	R/MIN	MM		MM	LB	KG	IN	MM
1BTS-1B012A-1K3B-1ZB	2	12	1.48	8.9	1921	50	3/8" SQUARE DRIVE	43	10.6	4.8	19.1	486
1BTS-1B035A-1K1B-1ZB	5	35	3.69	25.8	727	50	3/8" SQUARE DRIVE	43	10.6	4.8	19.1	486
1BTS-1B060A-1K2B-1ZB	15	53	11.1	39.1	427	50	3/8" SQUARE DRIVE	43	10.6	4.8	19.1	486
2BTS-2B110A-2K1B-2ZB	25	110	18.5	81	890	50	1/2" SQUARE DRIVE	56	16.8	7.6	20.8	528
2BTS-2B200A-2K3B-2ZB	40	200	29.5	148	502	50	3/4" SQUARE DRIVE	56	16.8	7.6	20.8	528
3BTS-3B300A-3K2B-3ZB	50	300	36.9	221	453	50	3/4" SQUARE DRIVE	81	31.1	14.1	23.2	589
4BTS-4B500A-4K2B-4ZA	100	500	74	369	254	50	3/4" SQUARE DRIVE	91	46.3	21	28.3	719
4BTS-4B660A-4K3B-4ZA	130	660	96	487	174	50	1" SQUARE DRIVE	91	46.3	21	28.3	719
4BTS-4B360A-4K1B-4Z1250A	320	1250	236	921	86	50	1" SQUARE DRIVE	121	64	29	30.4	771
4BTS-4B500A-4K2B-4Z1600A	400	1600	295	1180	68	50	1-1/2" SQUARE DRIVE	121	64	29	30.4	771

Intelligent Spindle - BTSE Size 1-4 (2-2800 Nm) - Straight Drive - Single Torque Transducer

On board servo module, Patented daisy chain, Torque transducer, , modular consutuction

- Long Service Life, Maximum Precision, High Accuracy, World class free speed, On-Board trouble shooting
- Floating adapter not included with spindle

MODEL	TORQUE RANGE				FREE SPEED	FLOAT	DRIVE TYPE	MIN CENTER TO CENTER	WEIGHT		LENGTH	LENGTH
	MIN NM	MAX NM	MIN FT LB	MAX FT LB	R/MIN	MM		MM	LB	KG	IN	MM
1BTSE-1B012A-1M3B-1ZB	2	12	1.48	8.85	1921	50	3/8" SQUARE DRIVE	43	10.6	4.8	19.1	486
1BTSE-1B035A-1M1B-1ZB	5	35	1.48	25.8	727	50	3/8" SQUARE DRIVE	43	10.6	4.8	19.1	486
1BTSE-1B060A-1M2B-1ZB	15	53	11.1	39.1	427	50	3/8" SQUARE DRIVE	43	10.6	4.8	19.1	486
2BTSE-2B110A-2M1B-2ZB	25	110	18.4	81.1	890	50	3/8" SQUARE DRIVE	56	16.8	7.6	20.8	528
2BTSE-2B200A-2M3B-2ZB	40	200	29.5	146	502	50	3/8" SQUARE DRIVE	56	16.8	7.6	20.8	528
3BTSE-3B300A-3M2B-3ZB	50	300	36.9	221	453	50	3/8" SQUARE DRIVE	81	31.1	14.1	23.2	589
4BTSE-4B500A-4M2B-4ZA	100	500	73.8	369	254	50	3/8" SQUARE DRIVE	91	46.3	21	28.3	719
4BTSE-4B660A-4M3B-4ZA	130	660	95.9	487	174	50	3/8" SQUARE DRIVE	91	46.3	21	28.3	719
4BTSE-4B360A-4M1B-4Z1250A	320	1250	236	922	86	50	3/8" SQUARE DRIVE	121	64	29	30.4	771
4BTSE-4B500A-4M2B-4Z1600A	400	1600	295	1180	68	50	3/8" SQUARE DRIVE	121	64	29	30.4	771
4BTSE-4B660A-4M3B-4Z2800G	980	2800	773	2065	37	50	3/8" SQUARE DRIVE	160	88	39.73	31.1	790

Intelligent Spindle - BTS Size 1-4 (2-1600 Nm) - Straight Drive - Twin Torque Transducer - Twin Angle Encoder

On board servo module, Patented daisy chain, Twin Torque transducer, Angle Encoder, Modular construction

- Long Service Life, Maximum Precision, High Accuracy, World class free speed, On-Board trouble shooting
- Floating adapter not included with spindle

MODEL	TORQUE RANGE				FREE SPEED	FLOAT	DRIVE TYPE	MIN CENTER TO CENTER	WEIGHT		LENGTH	LENGTH
	MIN NM	MAX NM	MIN FT LB	MAX FT LB	R/MIN	MM		MM	LB	KG	IN	MM
1BTS-1B012A-2/1K3B-1ZB	2	12	1.48	8.9	1921	50	3/8" SQUARE DRIVE	43	11.9	5.4	22.3	566
1BTS-1B035A-2/1K1B-1ZB	5	35	3.69	25.8	727	50	3/8" SQUARE DRIVE	43	11.9	5.4	22.3	566
1BTS-1B060A-2/1K2B-1ZB	15	53	11.1	39.1	427	50	3/8" SQUARE DRIVE	43	11.9	5.4	22.3	566
2BTS-2B110A-2/2K1B-2ZB	25	110	18.5	81	890	50	1/2" SQUARE DRIVE	56	19.2	8.7	24.6	625
2BTS-2B200A-2/2K3B-2ZB	40	200	29.5	148	502	50	3/4" SQUARE DRIVE	56	19.2	8.7	24.6	625
3BTS-3B300A-2/3K2B-3ZB	50	300	36.9	221	453	50	3/4" SQUARE DRIVE	81	35.7	16.2	27.6	701
4BTS-4B500A-2/4K2B-4ZA	100	500	74	369	254	50	3/4" SQUARE DRIVE	91	53	24	33.3	846
4BTS-4B660A-2/4K3B-4ZA	130	660	96	487	174	50	1" SQUARE DRIVE	91	53	24	33.3	846
4BTS-4B360A-2/4K1B-4Z1250A	320	1250	236	922	86	50	1" SQUARE DRIVE	121	71	32	35.4	899
4BTS-4B500A-2/4K2B-4Z1600A	400	1600	295	1180	68	50	1-1/2" SQUARE DRIVE	121	71	32	35.4	899

Intelligent Spindle - BUTS Size 1-4 (2-1600 Nm) - Straight Drive - Reversible Gears - Single Torque Transducer - Angle Encoder

- The transducer can be rotated for crowded multiple spindle arrangements (DGD 15° radial toothing).
- Floating adapter not included with spindle

MODEL	TORQUE RANGE				FREE SPEED	FLOAT	DRIVE TYPE	MIN CENTER TO CENTER	WEIGHT		LENGTH	LENGTH
	MIN NM	MAX NM	MIN FT LB	MAX FT LB	R/MIN	MM		MM	LB	KG	IN	MM
1BUTS-1B012A-1K3B-1ZB	2	12	1.48	8.9	1921	50	3/8" SQUARE DRIVE	43	11.7	5.3	15.5	393
1BUTS-1B035A-1K1B-1ZB	5	35	3.69	25.8	727	50	3/8" SQUARE DRIVE	43	11.7	5.3	15.5	393
1BUTS-1B060A-1K2B-1ZB	15	53	11.1	39.1	427	50	3/8" SQUARE DRIVE	43	11.7	5.3	15.5	393
2BUTS-2B110A-2K1B-2ZB	25	110	18.5	81	890	50	1/2" SQUARE DRIVE	56	19.0	8.6	14.4	367
2BUTS-2B200A-2K3B-2ZB	40	200	29.5	148	502	50	3/4" SQUARE DRIVE	56	19.0	8.6	14.4	367
3BUTS-3B300A-3K2B-3ZB	50	300	36.9	221	453	50	3/4" SQUARE DRIVE	81	35.5	16.1	16.4	417
4BUTS-4B500A-4K2B-4ZA	100	500	74	369	254	50	3/4" SQUARE DRIVE	91	50	22.5	21.5	546
4BUTS-4B660A-4K3B-4ZA	130	660	96	487	174	50	1" SQUARE DRIVE	91	50	22.5	21.5	546
4BUTS-4B360A-4K1B-4Z1250A	320	1250	236	922	86	50	1" SQUARE DRIVE	121	68	31	23.6	599
4BUTS-4B500A-4K2B-4Z1600A	400	1600	295	1180	68	50	1-1/2" SQUARE DRIVE	121	68	31	23.6	599

Intelligent Spindle - BUTS Size 1-4 (2-1600 Nm) - Straight Drive - Reversible Gears - Twin Torque Transducer - Twin Angle Encoder

On board servo module, Patented daisy chain, Twin Torque transducer, Twin Angle Encoder

- Long Service Life, Maximum Precision, High Accuracy, World class free speed, On-Board trouble shooting
- Floating adapter not included with spindle

MODEL	TORQUE RANGE				FREE SPEED	FLOAT	DRIVE TYPE	MIN CENTER TO CENTER	WEIGHT		LENGTH	LENGTH
	MIN NM	MAX NM	MIN FT LB	MAX FT LB	R/MIN	MM		MM	LB	KG	IN	MM
1BUTS-1B012A-2/1K3B-1ZB	2	12	1.48	8.9	1921	50	3/8" SQUARE DRIVE	43	13.0	5.9	15.5	393
1BUTS-1B035A-2/1K1B-1ZB	5	35	3.69	25.8	727	50	3/8" SQUARE DRIVE	43	13.0	5.9	15.5	393
1BUTS-1B060A-2/1K2B-1ZB	15	53	11.1	39.1	427	50	3/8" SQUARE DRIVE	43	13.0	5.9	15.5	393
2BUTS-2B110A-2/2K1B-2ZB	25	110	18.5	81	890	50	1/2" SQUARE DRIVE	56	21.4	9.7	18.3	464
2BUTS-2B200A-2/2K3B-2ZB	40	200	29.5	148	502	50	3/4" SQUARE DRIVE	56	21.4	9.7	18.3	464
3BUTS-3B300A-2/3K2B-3ZB	50	300	36.9	221	453	50	3/4" SQUARE DRIVE	81	40.1	18.2	20.8	528
4BUTS-4B500A-2/4K2B-4ZA	100	500	74	369	254	50	3/4" SQUARE DRIVE	91	56	25.5	26.5	674
4BUTS-4B660A-2/4K3B-4ZA	130	660	96	487	174	50	1" SQUARE DRIVE	91	56	25.5	26.5	674
4BUTS-4B360A-2/4K1B-4Z1250A	320	1250	236	922	86	50	1" SQUARE DRIVE	121	75	34	28.6	726
4BUTS-4B500A-2/4K2B-4Z1600A	400	1600	295	1180	68	50	1-1/2" SQUARE DRIVE	121	75	34	28.6	726

Intelligent Spindle - BUTSE Size 1-4 (2-1600 Nm) - Straight Drive - Reversible Gears - Single Torque Transducer

On board servo module, Patented daisy chain, Torque transducer, , modular consutuction

- The transducer can be rotated for crowded multiple spindle arrangements (DGD 15° radial toothing).
- Floating adapter not included with spindle

MODEL	TORQUE RANGE				FREE SPEED	FLOAT	DRIVE TYPE	MIN CENTER TO CENTER	WEIGHT		LENGTH	LENGTH
	MIN NM	MAX NM	MIN FT LB	MAX FT LB	R/MIN	MM		MM	LB	KG	IN	MM
1BUTSE-1B035A-1M1B-1ZB	5	5	3.69	3.69	727	50	3/8" SQUARE DRIVE	43	11.7	5.3	15.5	393
1BUTSE-1B012A-1M3B-1ZB	2	12	1.48	8.85	1921	50	3/8" SQUARE DRIVE	43	11.7	5.3	15.5	393
1BUTSE-1B060A-1M2B-1ZB	15	53	11.1	39.1	427	50	3/8" SQUARE DRIVE	43	11.7	5.3	15.5	393
2BUTSE-2B110A-2M1B-2ZB	25	110	18.4	81.1	890	50	1/2" SQUARE DRIVE	56	19.0	8.6	14.4	367
2BUTSE-2B200A-2M3B-2ZB	40	200	29.5	146	502	50	3/4" SQUARE DRIVE	56	19.0	8.6	14.4	367
3BUTSE-3B300A-3M2B-3ZB	50	300	36.9	221	453	50	3/4" SQUARE DRIVE	81	35.5	16.1	16.4	417
4BUTSE-4B500A-4M2B-4ZA	100	500	73.8	369	254	50	3/4" SQUARE DRIVE	91	50	22.5	21.5	546
4BUTSE-4B660A-4M3B-4ZA	130	660	95.9	487	174	50	1" SQUARE DRIVE	91	50	22.5	21.5	546
4BUTSE-4B360A-4M1B-4Z1250A	320	1250	236	922	86	50	1" SQUARE DRIVE	121	68	31	23.6	599
4BUTSE-4B500A-4M2B-4Z1600A	400	1600	295	1180	68	50	1-1/2" SQUARE DRIVE	121	68	31	23.6	599

Intelligent Spindle - BTS Size 1-4 (25-750 Nm) - Offset Drive - Twin Torque Transducer - Twin Angle Encoder

On board servo module, Patented daisy chain, Twin Torque transducer, Twin Angle Encoder

- Long Service Life, Maximum Precision, High Accuracy, World class free speed, On-Board trouble shooting
- Floating adapter not included with spindle

MODEL	TORQUE RANGE				FREE SPEED	FLOAT	DRIVE TYPE	MIN CENTER TO CENTER	WEIGHT		LENGTH	LENGTH
	MIN NM	MAX NM	MIN FT LB	MAX FT LB	R/MIN	MM		MM	LB	KG	IN	MM
1BTS-1B012A-1K3B-1VK3B	2	12	1.48	8.9	1825	50	3/8" SQUARE DRIVE	35	13.0	5.9	21.8	554
1BTS-1B035A-1K1B-1VK1B	5	35	3.69	25.8	690	50	3/8" SQUARE DRIVE	35	13.0	5.9	21.8	554
1BTS-1B060A-1K2B-1VK2B	15	53	11.1	39.1	405	50	3/8" SQUARE DRIVE	35	13.0	5.9	21.8	554
2BTS-2B110A-2K1B-2VK1B	25	110	18.5	81	831	50	1/2" SQUARE DRIVE	44	22.7	10.3	25.5	648
2BTS-2B200A-2K3B-2VK3B	40	200	29.5	148	468	50	3/4" SQUARE DRIVE	44	22.7	10.3	25.5	648
3BTS-3B300A-3K2B-3VK2B	50	300	36.9	221	421	50	3/4" SQUARE DRIVE	59	38.1	17.3	27.4	696
4BTS-4B500A-4K2B-4VK2B	100	500	74	369	238	50	3/4" SQUARE DRIVE	76	56	25.5	32.0	812
4BTS-4B660A-4K3B-4VK3B	130	660	96	487	163	50	1" SQUARE DRIVE	76	56	25.5	32.0	812
4BTS-4B660A-4K3M-4VK4B	160	750	118	554	135	50	1" SQUARE DRIVE	76	57	26	32.0	812

Intelligent Spindle - BUTS size 1-4 (2-750 Nm) - Offset Drive - Reversible Gears - Twin Torque Transducer - Twin Angle Encoder

On board servo module, Patented daisy chain, Twin Torque transducer, Twin Angle Encoder

- Long Service Life, Maximum Precision, High Accuracy, World class free speed, On-Board trouble shooting
- Floating adapter not included with spindle

MODEL	TORQUE RANGE				FREE SPEED	FLOAT	DRIVE TYPE	MIN CENTER TO CENTER	WEIGHT		LENGTH	LENGTH
	MIN NM	MAX NM	MIN FT LB	MAX FT LB	R/MIN	MM		MM	LB	KG	IN	MM
1BUTS-1B012A-1K3B-1VK3B	2	12	1.48	8.9	1825	50	3/8" SQUARE DRIVE	35	14.1	6.4	15.0	382
1BUTS-1B035A-1K1B-1VK1B	5	35	3.69	25.8	690	50	3/8" SQUARE DRIVE	35	14.1	6.4	15.0	382
1BUTS-1B060A-1K2B-1VK2B	15	53	11.1	39.1	405	50	3/8" SQUARE DRIVE	35	14.1	6.4	15.0	382
2BUTS-2B110A-2K1B-2VK1B	25	110	18.5	81	831	50	1/2" SQUARE DRIVE	44	24.9	11.3	19.2	487
2BUTS-2B200A-2K3B-2VK3B	40	200	29.5	148	468	50	3/4" SQUARE DRIVE	44	24.9	11.3	19.2	487
3BUTS-3B300A-3K2B-3VK2B	50	300	36.9	221	421	50	3/4" SQUARE DRIVE	59	42.5	19.3	20.6	523
4BUTS-4B500A-4K2B-4VK2B	100	500	74	369	238	50	3/4" SQUARE DRIVE	76	60	27	25.2	639
4BUTS-4B660A-4K3B-4VK3B	130	660	96	487	163	50	1" SQUARE DRIVE	76	60	27	25.2	639
4BUTS-4B660A-4K3M-4VK4B	160	750	118	554	135	50	1" SQUARE DRIVE	76	61	27.5	25.2	639

Intelligent Spindle - BTS Size 1-4 (2-750 Nm) - Offset Drive - Single Torque Transducer - Angle Encoder

On board servo module, Patented daisy chain, Single Torque Transducer, Angle Encoder, Modular construction

- Long Service Life, Maximum Precision, High Accuracy, World class free speed, On-Board trouble shooting
- Floating adapter not included with spindle

MODEL	TORQUE RANGE				FREE SPEED	FLOAT	DRIVE TYPE	MIN CENTER TO CENTER	WEIGHT		LENGTH	LENGTH
	MIN NM	MAX NM	MIN FT LB	MAX FT LB	R/MIN	MM		MM	LB	KG	IN	MM
1BTS-1B012A-1VK3B	2	12	1.48	8.9	1825	50	3/8" SQUARE DRIVE	35	11.7	5.3	18.7	474
1BTS-1B035A-1VK1B	5	35	3.69	25.8	690	50	3/8" SQUARE DRIVE	35	11.7	5.3	18.7	474
1BTS-1B060A-1VK2B	15	53	11.1	39.1	405	50	3/8" SQUARE DRIVE	35	11.7	5.3	18.7	474
2BTS-2B110A-2VK1B	25	110	18.5	81	831	50	1/2" SQUARE DRIVE	44	20.3	9.2	21.7	551
2BTS-2B200A-2VK3B	40	200	29.5	148	468	50	3/4" SQUARE DRIVE	44	20.3	9.2	21.7	551
3BTS-3B300A-3VK2B	50	300	36.9	221	421	50	3/4" SQUARE DRIVE	59	33.5	15.2	23.0	584
4BTS-4B500A-4VK2B	100	500	74	369	238	50	3/4" SQUARE DRIVE	76	50	22.5	26.9	684
4BTS-4B660A-4VK3B	130	660	96	487	163	50	1" SQUARE DRIVE	76	50	22.5	26.9	684
4BTS-4B660A-4VK4B	160	750	118	554	135	50	1" SQUARE DRIVE	76	51	23	26.9	684

Intelligent Spindle - BTSE Size 1-4 (2-750 Nm) - Offset Drive - Single Torque Transducer - Angle Encoder

On board servo module, Patented daisy chain, Torque transducer, , modular consutuction

- Long Service Life, Maximum Precision, High Accuracy, World class free speed, On-Board trouble shooting
- Floating adapter not included with spindle

MODEL	TORQUE RANGE				FREE SPEED	FLOAT	DRIVE TYPE	MIN CENTER TO CENTER	WEIGHT		LENGTH	LENGTH
	MIN NM	MAX NM	MIN FT LB	MAX FT LB	R/MIN	MM		MM	LB	KG	IN	MM
1BTSE-1B012A-1VM3B	2	12	1.48	8.85	1825	50	3/8" SQUARE DRIVE	35	11.7	5.3	18.7	474
1BTSE-1B035A-1VM1B	5	35	3.69	25.8	690	50	3/8" SQUARE DRIVE	35	11.7	5.3	18.7	474
1BTSE-1B060A-1VM2B	15	53	11.1	39.1	405	50	3/8" SQUARE DRIVE	35	11.7	5.3	18.7	474
2BTSE-2B110A-2VM1B	25	110	18.4	81.1	831	50	3/8" SQUARE DRIVE	44	20.3	9.2	21.7	551
2BTSE-2B200A-2VM3B	40	200	29.5	146	468	50	3/8" SQUARE DRIVE	44	20.3	9.2	21.7	551
3BTSE-3B300A-3VM2B	50	300	36.9	221	421	50	3/4" SQUARE DRIVE	59	33.5	15.2	23.0	584
4BTSE-4B500A-4VM2B	100	500	73.8	369	238	50	3/4" SQUARE DRIVE	76	50	22.5	26.9	684
4BTSE-4B660A-4VM3B	130	660	95.9	487	163	50	1" SQUARE DRIVE	76	50	22.5	26.9	684
4BTSE-4B660A-4VM4B	160	750	118	553	135	50	1" SQUARE DRIVE	76	51	23	26.9	684

Intelligent Spindle - BUTS size 1-4 (2-750 Nm) - Offset Drive - Reversible Gears - Single Torque Transducer - Angle Encoder

- The transducer can be rotated for crowded multiple spindle arrangements (DGD 15° radial toothing).
- Floating adapter not included with spindle

MODEL	TORQUE RANGE				FREE SPEED	FLOAT	DRIVE TYPE	MIN CENTER TO CENTER	WEIGHT		LENGTH	LENGTH
	MIN NM	MAX NM	MIN FT LB	MAX FT LB	R/MIN	MM		MM	LB	KG	IN	MM
1BUTS-1B012A-1VK3B	2	12	1.48	8.9	1825	50	3/8" SQUARE DRIVE	35	12.8	5.8	15.0	382
1BUTS-1B035A-1VK1B	5	35	3.69	25.8	690	50	3/8" SQUARE DRIVE	35	12.8	5.8	15.0	382
1BUTS-1B060A-1VK2B	15	53	11.1	39.1	405	50	3/8" SQUARE DRIVE	35	12.8	5.8	15.0	382
2BUTS-2B110A-2VK1B	25	110	18.5	81	831	50	1/2" SQUARE DRIVE	44	22.5	10.2	15.4	390
2BUTS-2B200A-2VK3B	40	200	29.5	148	468	50	3/4" SQUARE DRIVE	44	22.5	10.2	15.4	390
3BUTS-3B300A-3VK2B	50	300	36.9	221	421	50	3/4" SQUARE DRIVE	59	37.9	17.2	16.2	412
4BUTS-4B500A-4VK2B	100	500	74	369	238	50	3/4" SQUARE DRIVE	76	53	24	20.2	512
4BUTS-4B660A-4VK3B	130	660	96	487	163	50	1" SQUARE DRIVE	76	53	24	20.2	512
4BUTS-4B660A-4VK4B	160	750	118	554	135	50	1" SQUARE DRIVE	76	54	24.5	20.2	512

Intelligent Spindle - BUTSE Size 1-4 (2-750 Nm) - Offset Drive - Reversible Gears - Single Torque Transducer - Single Angle Encoder

On board servo module, Patented daisy chain, Torque transducer, , modular consutuction

- The transducer can be rotated for crowded multiple spindle arrangements (DGD 15° radial toothing).
- Floating adapter not included with spindle

MODEL	TORQUE RANGE				FREE SPEED	FLOAT	DRIVE TYPE	MIN CENTER TO CENTER	WEIGHT		LENGTH	LENGTH
	MIN NM	MAX NM	MIN FT LB	MAX FT LB	R/MIN	MM		MM	LB	KG	IN	MM
1BUTSE-1B012A-1VM3B	2	12	1.48	8.85	1825	50	3/8" SQUARE DRIVE	35	12.8	5.8	15.0	382
1BUTSE-1B035A-1VM1B	12	35	8.85	25.8	690	50	3/8" SQUARE DRIVE	35	12.8	5.8	15.0	382
1BUTSE-1B060A-1VM2B	15	53	11.1	39.1	405	50	3/8" SQUARE DRIVE	35	12.8	5.8	15.0	382
2BUTSE-2B110A-2VM1B	25	110	18.4	81.1	831	50	1/2" SQUARE DRIVE	44	22.5	10.2	15.4	390
2BUTSE-2B200A-2VM3B	40	200	29.5	146	468	50	3/4" SQUARE DRIVE	44	22.5	10.2	15.4	390
3BUTSE-3B300A-3VM2B	50	300	36.9	221	421	50	3/4" SQUARE DRIVE	59	37.9	17.2	16.2	412
4BUTSE-4B500A-4VM2B	100	500	73.8	369	238	50	3/4" SQUARE DRIVE	76	53	24	20.2	512
4BUTSE-4B660A-4VM3B	130	660	95.9	487	163	50	1" SQUARE DRIVE	76	53	24	20.2	512
4BUTSE-4B660A-4VM4B	160	750	118	553	135	50	1" SQUARE DRIVE	76	54	24.5	20.2	512

Intelligent Spindle - BTS Size 1-4 (2-660 Nm) - Angle Drive - Single Torque Transducer - Single Angle Encoder

On board servo module, Patented daisy chain, Twin Torque transducer, TwinAngle Encoder, Modular construction

- Long Service Life, Maximum Precision, High Accuracy, World class free speed, On-Board trouble shooting
- Floating adapter not included with spindle

MODEL	TORQUE RANGE				FREE SPEED	FLOAT	DRIVE TYPE	MIN CENTER TO CENTER	WEIGHT		LENGTH	LENGTH
	MIN NM	MAX NM	MIN FT LB	MAX FT LB	R/MIN	MM		MM	LB	KG	IN	MM
1BTS-1B012A-1WK3B	2	12	1.48	8.9	1801	25	3/8" SQUARE DRIVE	52	12.6	5.7	21.3	542
1BTS-1B035A-1WK1B	5	35	3.69	25.8	681	25	3/8" SQUARE DRIVE	52	12.6	5.7	21.3	542
1BTS-1B060A-1WK2B	15	53	11.1	39.1	400	25	3/8" SQUARE DRIVE	52	12.6	5.7	21.3	542
2BTS-2B110A-2WK1B	25	110	18.5	81	838	25	1/2" SQUARE DRIVE	59	19.2	8.7	22.9	581
2BTS-2B200A-2WK3B	40	200	29.5	148	472	25	3/4" SQUARE DRIVE	59	19.2	8.7	22.9	581
3BTS-3B300A-3WK2B	50	300	36.9	221	437	25	3/4" SQUARE DRIVE	81	39.2	17.8	26.7	678
4BTS-4B500A-4WK2B	100	500	74	369	245	25	1" SQUARE DRIVE	112	60	27.1	28.7	729
4BTS-4B660A-4WK3B	130	660	96	487	167	25	1" SQUARE DRIVE	112	60	27.1	28.7	729

Intelligent Spindle - BTSE Size 1-4 (2-660 Nm) - Angle Drive - Single Torque Transducer

On board servo module, Patented daisy chain, Torque transducer, , modular consutuction

- Long Service Life, Maximum Precision, High Accuracy, World class free speed, On-Board trouble shooting
- Floating adapter not included with spindle

MODEL	TORQUE RANGE				FREE SPEED	FLOAT	DRIVE TYPE	MIN CENTER TO CENTER	WEIGHT		LENGTH	LENGTH
	MIN NM	MAX NM	MIN FT LB	MAX FT LB	R/MIN	MM		MM	LB	KG	IN	MM
1BTSE-1B012A-1WM3B	2	12	1.48	8.85	1801	25	3/8" SQUARE DRIVE	52	12.6	5.7	21.3	542
1BTSE-1B035A-1WM1B	5	35	3.69	25.8	681	25	3/8" SQUARE DRIVE	52	12.6	5.7	21.3	542
1BTSE-1B060A-1WM2B	15	53	11.1	39.1	400	25	3/8" SQUARE DRIVE	52	12.6	5.7	21.3	542
2BTSE-2B110A-2WM1B	25	110	18.4	81.1	838	25	1/2" SQUARE DRIVE	59	19.2	8.7	22.9	581
2BTSE-2B200A-2WM3B	40	200	29.5	146	472	25	3/4" SQUARE DRIVE	59	19.2	8.7	22.9	581
3BTSE-3B300A-3WM2B	50	300	36.9	221	437	25	3/4" SQUARE DRIVE	81	39.2	17.8	26.7	678
4BTSE-4B500A-4WM2B	100	500	73.8	369	245	25	1" SQUARE DRIVE	112	60	27.1	28.7	729
4BTSE-4B660A-4WM3B	130	660	95.9	487	167	25	1" SQUARE DRIVE	112	60	27.1	28.7	729

Intelligent Spindle - BUTSE Size 1-4 (2-660 Nm) - Angle Drive - Reversible Gears - Single Torque Transducer

On board servo module, Patented daisy chain, Torque transducer, , modular consutuction

- Long Service Life, Maximum Precision, High Accuracy, World class free speed, On-Board trouble shooting
- Floating adapter not included with spindle

MODEL	TORQUE RANGE				FREE SPEED	FLOAT	DRIVE TYPE	MIN CENTER TO CENTER	WEIGHT		LENGTH	LENGTH
	MIN NM	MAX NM	MIN FT LB	MAX FT LB	R/MIN	MM		MM	LB	KG	IN	MM
1BUTSE-1B012A-1WM3B	2	12	1.48	8.85	1801	25	3/8" SQUARE DRIVE	52	13.7	6.2	14.6	370
1BUTSE-1B035A-1WM1B	5	35	3.69	25.8	681	25	3/8" SQUARE DRIVE	52	13.7	6.2	14.6	370
1BUTSE-1B060A-1WM2B	12	53	8.85	39.1	400	25	3/8" SQUARE DRIVE	52	13.7	6.2	14.6	370
2BUTSE-2B110A-2WM1B	25	110	18.4	81.1	838	25	1/2" SQUARE DRIVE	59	21.4	9.7	16.6	421
2BUTSE-2B200A-2WM3B	40	200	29.5	146	472	25	3/4" SQUARE DRIVE	59	21.4	9.7	16.6	421
3BUTSE-3B300A-3WM2B	50	300	36.9	221	437	25	3/4" SQUARE DRIVE	81	43.7	19.8	19.9	506
4BUTSE-4B500A-4WM2B	100	500	73.8	369	245	25	1" SQUARE DRIVE	112	63	28.6	21.9	556
4BUTSE-4B660A-4WM3B	130	660	95.9	487	167	25	1" SQUARE DRIVE	112	63	28.7	21.9	556

Intelligent Spindle - BUTS Size 1-4 (2-660 Nm) - Angle Drive - Reversible Gears - Twin Torque Transducer - Twin Angle Encoder

On board servo module, Patented daisy chain, Torque transducer, , modular consutuction

- Long Service Life, Maximum Precision, High Accuracy, World class free speed, On-Board trouble shooting
- Floating adapter not included with spindle

MODEL	TORQUE RANGE				FREE SPEED	FLOAT	DRIVE TYPE	MIN CENTER TO CENTER	WEIGHT		LENGTH	LENGTH
	MIN NM	MAX NM	MIN FT LB	MAX FT LB	R/MIN	MM		MM	LB	KG	IN	MM
1BUTS-1B012A-1K3B-1WK3B	2	12	1.48	8.9	1801	25	3/8" SQUARE DRIVE	52	15.0	6.8	17.7	450
1BUTS-1B035A-1K1B-1WK1B	5	35	3.69	25.8	681	25	3/8" SQUARE DRIVE	52	15.0	6.8	17.7	450
1BUTS-1B060A-1K2B-1WK2B	15	53	11.1	39.1	400	25	3/8" SQUARE DRIVE	52	15.0	6.8	17.7	450
2BUTS-2B110A-2K1B-2WK1B	25	110	18.5	81	838	25	1/2" SQUARE DRIVE	59	21.4	9.7	20.4	518
2BUTS-2B200A-2K3B-2WK3B	40	200	29.5	148	472	25	3/4" SQUARE DRIVE	59	21.4	9.7	20.4	518
3BUTS-3B300A-3K2B-3WK2B	50	300	36.9	221	437	25	3/4" SQUARE DRIVE	81	48	21.9	24.3	617
4BUTS-4B500A-4K2B-4WK2B	100	500	74	369	245	25	1" SQUARE DRIVE	112	70	31.6	26.9	684
4BUTS-4B660A-4K3B-4WK3B	130	660	96	487	167	25	1" SQUARE DRIVE	112	70	31.7	26.9	684

Intelligent Spindle - BTS Size 1-4 (2-660 Nm) - Angle Drive - Twin Torque Transducer - Twin Angle Encoder

On board servo module, Patented daisy chain, Twin Torque transducer, Angle Encoder

- Long Service Life, Maximum Precision, High Accuracy, World class free speed, On-Board trouble shooting
- Floating adapter not included with spindle

MODEL	TORQUE RANGE				FREE SPEED	FLOAT	DRIVE TYPE	MIN CENTER TO CENTER	WEIGHT		LENGTH	LENGTH
	MIN NM	MAX NM	MIN FT LB	MAX FT LB	R/MIN	MM		MM	LB	KG	IN	MM
1BTS-1B012A-1K3B-1WK3B	2	12	1.48	8.9	1801	25	3/8" SQUARE DRIVE	52	13.9	6.3	24.5	622
1BTS-1B035A-1K1B-1WK1B	5	35	3.69	25.8	681	25	3/8" SQUARE DRIVE	52	13.9	6.3	24.5	622
1BTS-1B060A-1K2B-1WK2B	15	53	11.1	39.1	400	25	3/8" SQUARE DRIVE	52	13.9	6.3	24.5	622
2BTS-2B110A-2K1B-2WK1B	25	110	18.5	81	838	25	1/2" SQUARE DRIVE	59	21.6	9.8	26.7	678
2BTS-2B200A-2K3B-2WK3B	40	200	29.5	148	472	25	3/4" SQUARE DRIVE	59	21.6	9.8	26.7	678
3BTS-3B300A-3K2B-3WK2B	50	300	36.9	221	437	25	3/4" SQUARE DRIVE	81	43.9	19.9	31.1	790
4BTS-4B500A-4K2B-4WK2B	100	500	74	369	245	25	1" SQUARE DRIVE	112	66	30.1	33.7	856
4BTS-4B660A-4K3B-4WK3B	130	660	96	487	167	25	1" SQUARE DRIVE	112	66	30.1	33.7	856

Intelligent Spindle - BUTS Size 1-4 (2-660 Nm) - Angle Drive - Reversible Gears - Single Torque Transducer - Angle Encoder

On board servo module, Patented daisy chain, Twin Torque transducer, Angle Encoder

- Long Service Life, Maximum Precision, High Accuracy, World class free speed, On-Board trouble shooting
- Floating adapter not included with spindle

MODEL	TORQUE RANGE				FREE SPEED	FLOAT	DRIVE TYPE	MIN CENTER TO CENTER	WEIGHT		LENGTH	LENGTH
	MIN NM	MAX NM	MIN FT LB	MAX FT LB	R/MIN	MM		MM	LB	KG	IN	MM
1BUTS-1B012A-1WK3B	2	12	1.48	8.9	1801	25	3/8" SQUARE DRIVE	52	13.7	6.2	14.6	370
1BUTS-1B035A-1WK1B	5	35	3.69	25.8	681	25	3/8" SQUARE DRIVE	52	13.7	6.2	14.6	370
1BUTS-1B060A-1WK2B	15	53	11.1	39.1	400	25	3/8" SQUARE DRIVE	52	13.7	6.2	14.6	370
2BUTS-2B110A-2WK1B	25	110	18.5	81	838	25	1/2" SQUARE DRIVE	59	21.4	9.7	16.6	421
2BUTS-2B200A-2WK3B	40	200	29.5	148	472	25	3/4" SQUARE DRIVE	59	21.4	9.7	16.6	421
3BUTS-3B300A-3WK2B	50	300	36.9	221	437	25	3/4" SQUARE DRIVE	81	43.7	19.8	19.9	506
4BUTS-4B500A-4WK2B	100	500	74	369	245	25	1" SQUARE DRIVE	112	63	28.6	21.9	556
4BUTS-4B660A-4WK3B	130	660	96	487	167	25	1" SQUARE DRIVE	112	63	28.7	21.9	556

Conventional Spindle - BB Size 1-4 (2-1600 Nm) - Straight Drive - Single Torque Transducer - Single Angle Encoder

Single Torque Transducer, Angle Encoder, Modular construction

- Long Service Life, Maximum Precision, High Accuracy
- Floating adapter not included with spindle

MODEL	TORQUE RANGE				FREE SPEED	FLOAT	DRIVE TYPE	MIN CENTER TO CENTER	WEIGHT		LENGTH	LENGTH
	MIN NM	MAX NM	MIN FT LB	MAX FT LB	R/MIN	MM		MM	LB	KG	IN	MM
1BB-1B011A-1K3MS-1ZA	2	11	1.48	8.1	1222	50	3/8" SQUARE DRIVE	43	7.7	3.5	15.6	396
1BB-1B030A-1K1M-1ZA	5	32	3.69	23.6	462	50	3/8" SQUARE DRIVE	43	7.7	3.5	15.6	396
1BB-1B050A-1K2M-1ZA	15	53	11.1	39.1	272	50	3/8" SQUARE DRIVE	43	7.7	3.5	15.6	396
2BB-2B100A-2K1M-2ZA	25	110	18.5	81	890	50	1/2" SQUARE DRIVE	56	14.3	6.5	18.9	481
2BB-2B150A-2K2M-2ZA	30	150	22	110.6	502	50	3/4" SQUARE DRIVE	56	14.3	6.5	18.9	481
3BB-3B180A-3K1M-3ZA	30	180	22.1	133	339	50	3/4" SQUARE DRIVE	81	28.9	13.1	22.0	558
3BB-3B260A-3K2M-3ZA	50	260	36.9	192	220	50	3/4" SQUARE DRIVE	81	28.9	13.1	22.0	558
4BB-4B360A-4K1M-4ZA	120	360	89	266	266	50	3/4" SQUARE DRIVE	91	44.1	20	27.1	689
4BB-4B460A-4K2M-4ZA	160	460	118	339	209	50	3/4" SQUARE DRIVE	91	44.1	20	27.1	689
4BB-4B630A-4K3M-4ZA	220	630	162	465	141	50	1" SQUARE DRIVE	91	44.1	20	27.1	689
4BB-4B360A-4K1MS-4Z1250A	400	1250	295	923	71	50	1" SQUARE DRIVE	121	62	28	29.2	742
4BB-4B460A-4K2MS-4Z1600A	540	1600	399	1181	56	50	1/2" SQUARE DRIVE	121	62	28	29.2	742

Conventional Spindle - BB Size 1-4 (2-1600 Nm) - Straight Drive - Twin Torque Transducer - Twin Angle Encoder

Twin Torque transducer, Twin Angle Encoder, Modular construction

- Long Service Life, Maximum Precision, High Accuracy
- Floating adapter not included with spindle

MODEL	TORQUE RANGE				FREE SPEED	FLOAT	DRIVE TYPE	MIN CENTER TO CENTER	WEIGHT		LENGTH	LENGTH
	MIN NM	MAX NM	MIN FT LB	MAX FT LB	R/MIN	MM		MM	LB	KG	IN	MM
1BB-1B011A-2/1K3MS-1ZA	2	11	1.48	8.1	1222	50	3/8" SQUARE DRIVE	43	9.0	4.1	18.7	476
1BB-1B030A-2/1K1M-1ZA	5	32	3.69	23.6	462	50	3/8" SQUARE DRIVE	43	9.0	4.1	18.7	476
1BB-1B050A-2/1K2M-1ZA	15	53	11.1	39.1	272	50	3/8" SQUARE DRIVE	43	9.0	4.1	18.7	476
2BB-2B100A-2/2K1M-2ZA	25	110	18.5	81	890	50	1/2" SQUARE DRIVE	56	16.8	7.6	22.8	578
2BB-2B150A-2/2K2M-2ZA	30	150	22.1	110.6	502	50	3/4" SQUARE DRIVE	56	16.8	7.6	22.8	578
3BB-3B180A-2/3K1M-3ZA	30	180	22.1	133	339	50	3/4" SQUARE DRIVE	81	33.5	15.2	26.4	670
3BB-3B260A-2/3K2M-3ZA	50	260	36.9	192	220	50	3/4" SQUARE DRIVE	81	33.5	15.2	26.4	670
4BB-4B360A-2/4K1M-4ZA	120	360	89	266	266	50	3/4" SQUARE DRIVE	91	51	23	32.2	817
4BB-4B460A-2/4K2M-4ZA	160	460	118	339	209	50	3/4" SQUARE DRIVE	91	51	23	32.2	817
4BB-4B630A-2/4K3M-4ZA	220	630	162	465	141	50	1" SQUARE DRIVE	91	51	23	32.2	817
4BB-4B360A-2/4K1MS-4Z1250A	400	1250	295	923	71	50	1" SQUARE DRIVE	121			34.2	868
4BB-4B460A-2/4K2MS-4Z1600A	540	1600	399	1181	56	50	1/2" SQUARE DRIVE	121			34.2	868

Conventional Spindle - BUB Size 1-4 (2-630 Nm) - Straight Drive - Reversible Gears - Twin Torque Transducer - Twin Angle Encoder

Twin Torque Transducer, Twin Angle Encoder, Modular construction

- Long Service Life, Maximum Precision, High Accuracy
- Floating adapter not included with spindle

<STEPTABLE O="SG_746126" OT="PRODUCT" TT="STIBO.7160717" VC="EN-US ALL USA" VO="735745" W="MAIN" />

Conventional Spindle - BUB Size 1-4 (2-1600 Nm) - Straight Drive - Reversible Gears - Single Transducer - Single Angle Encoder

Twin Torque Transducer, Twin Angle Encoder, Modular construction

- Long Service Life, Maximum Precision, High Accuracy
- Floating adapter not included with spindle

MODEL	TORQUE RANGE				FREE SPEED	FLOAT	DRIVE TYPE	MIN CENTER TO CENTER	WEIGHT		LENGTH	LENGTH
	MIN NM	MAX NM	MIN FT LB	MAX FT LB	R/MIN	MM		MM	LB	KG	IN	MM
1BUB-1B011A-1K3MS-1ZA	2	11	1.48	8.1	1222	50	3/8" SQUARE DRIVE	43	8.8	4	9.9	251
1BUB-1B030A-1K1M-1ZA	5	32	3.69	23.6	462	50	3/8" SQUARE DRIVE	43	8.8	4	9.9	251
1BUB-1B050A-1K2M-1ZA	15	53	11.1	39.1	272	50	3/8" SQUARE DRIVE	43	8.8	4	9.9	251
2BUB-2B100A-2K1M-2ZA	25	110	18.5	81	890	50	1/2" SQUARE DRIVE	56	16.5	7.5	12.2	310
2BUB-2B150A-2K2M-2ZA	30	150	22.1	110.6	502	50	3/4" SQUARE DRIVE	56	16.5	7.5	12.2	310
3BUB-3B180A-3K1M-3ZA	30	180	22.1	133	339	50	3/4" SQUARE DRIVE	81	33.3	15.1	14.4	366
3BUB-3B260A-3K2M-3ZA	50	260	36.9	192	220	50	3/4" SQUARE DRIVE	81	33.3	15.1	14.4	366
4BUB-4B360A-4K1M-4ZA	120	360	89	266	266	50	3/4" SQUARE DRIVE	91	47.4	21.5	19.6	497
4BUB-4B460A-4K2M-4ZA	160	460	118	339	209	50	3/4" SQUARE DRIVE	91	47.4	21.5	19.6	497
4BUB-4B630A-4K3M-4ZA	220	630	162	465	141	50	1" SQUARE DRIVE	91	47.4	21.5	19.6	497
4BUB-4B360A-4K1MS-4Z1250A	400	1250	295	923	71	50	1" SQUARE DRIVE	121	66	30	21.7	550
4BUB-4B460A-4K2MS-4Z1600A	540	1600	399	1181	56	50	1/2" SQUARE DRIVE	121	66	30	21.7	550

Conventional Spindle - BUB Size 1-4 (2-1600 Nm) - Straight Drive - Reversible Gears - Twin Torque Transducer - Twin Angle Encoder

Twin Torque transducer, Angle Encoder, Modular construction

- Long Service Life, Maximum Precision, High Accuracy
- Floating adapter not included with spindle

MODEL	TORQUE RANGE				FREE SPEED	FLOAT	DRIVE TYPE	MIN CENTER TO CENTER	WEIGHT		LENGTH	LENGTH
	MIN NM	MAX NM	MIN FT LB	MAX FT LB	R/MIN	MM		MM	LB	KG	IN	MM
1BUB-1B011A-2/1K3MS-1ZA	2	11	1.48	8.1	1222	50	3/8" SQUARE DRIVE	43	10.1	4.6	13.0	331
1BUB-1B030A-2/1K1M-1ZA	5	32	3.69	23.6	462	50	3/8" SQUARE DRIVE	43	10.1	4.6	13.0	331
1BUB-1B050A-2/1K2M-1ZA	15	53	11.1	39.1	272	50	3/8" SQUARE DRIVE	43	10.1	4.6	13.0	331
2BUB-2B100A-2/2K1M-2ZA	25	110	18.5	81	890	50	1/2" SQUARE DRIVE	56	19.0	8.6	16.0	407
2BUB-2B150A-2/2K2M-2ZA	30	150	22.1	110.6	502	50	3/4" SQUARE DRIVE	56	19.0	8.6	16.0	407
3BUB-3B180A-2/3K1M-3ZA	30	180	22.1	133	339	50	3/4" SQUARE DRIVE	81	37.9	17.2	18.8	478
3BUB-3B260A-2/3K2M-3ZA	50	260	36.9	192	220	50	3/4" SQUARE DRIVE	81	37.9	17.2	18.8	478
4BUB-4B360A-2/4K1M-4ZA	120	360	89	266	266	50	3/4" SQUARE DRIVE	91	54	24.5	24.6	625
4BUB-4B460A-2/4K2M-4ZA	160	460	118	339	209	50	3/4" SQUARE DRIVE	91	54	24.5	24.6	625
4BUB-4B630A-2/4K3M-4ZA	220	630	162	465	141	50	1" SQUARE DRIVE	91	54	24.5	24.6	625
4BUB-4B360A-2/4K1MS-4Z1250A	400	1250	295	923	71	50	1" SQUARE DRIVE	121			26.7	677
4BUB-4B460A-2/4K2MS-4Z1600A	540	1600	399	1181	56	50	1/2" SQUARE DRIVE	121			26.7	677

Conventional Spindle - BB Size 1-4 (2-1100 Nm) - Offset Drive - Single Torque Transducer - Single Angle Encoder

Single Torque transducer, Angle Encoder , Modular construction

- Long Service Life, Maximum Precision, High Accuracy
- Floating adapter not included with spindle

MODEL	TORQUE RANGE				FREE SPEED	FLOAT	DRIVE TYPE	MIN CENTER TO CENTER	WEIGHT		LENGTH	LENGTH
	MIN NM	MAX NM	MIN FT LB	MAX FT LB	R/MIN	MM		MM	LB	KG	IN	MM
1BB-1B011A-1VK3MS	2	11	1.48	8.1	1161	50	3/8" SQUARE DRIVE	35	8.8	4	15.1	384
1BB-1B030A-1VK1M	5	32	3.69	23.6	439	50	3/8" SQUARE DRIVE	35	8.8	4	15.1	384
1BB-1B050A-1VK2M	15	53	11.1	39.1	258	50	3/8" SQUARE DRIVE	35	8.8	4	15.1	384
2BB-2B100A-2VK1M	25	110	18.5	81	831	50	1/2" SQUARE DRIVE	44	17.9	8.1	19.8	504
2BB-2B150A-2VK2M	30	150	29.5	110.6	468	50	3/4" SQUARE DRIVE	44	17.9	8.1	19.8	504
3BB-3B180A-3VK1M	30	180	22.1	133	315	50	3/4" SQUARE DRIVE	59	31.3	14.2	21.8	553
3BB-3B260A-3VK2M	50	260	36.9	192	204	50	3/4" SQUARE DRIVE	59	31.3	14.2	21.8	553
4BB-4B360A-4VK1M	120	360	89	266	249	50	3/4" SQUARE DRIVE	76	47.4	21.5	25.8	655
4BB-4B460A-4VK2M	160	460	118	339	196	50	3/4" SQUARE DRIVE	76	47.4	21.5	25.8	655
4BB-4B630A-4VK3M	220	630	162	465	133	50	1" SQUARE DRIVE	76	47.4	21.5	25.8	655
4BB-4B630A-4VK4MS	250	750	554	590	110	70	1" SQUARE DRIVE	76	49	22	25.8	655
4BB-4B630A-4K3MS-F13	400	1100	295	812	75	50	1" SQUARE DRIVE	85	49	22	31.2	792

Conventional Spindle - BB Size 1-4 (2-1100 Nm) - Offset Drive - Twin Torque Transducer - Twin Angle Encoder

Twin Torque transducer, Angle Encoder, Modular construction

- Long Service Life, Maximum Precision, High Accuracy
- Floating adapter not included with spindle

MODEL	TORQUE RANGE				FREE SPEED	FLOAT	DRIVE TYPE	MIN CENTER TO CENTER	WEIGHT		LENGTH	LENGTH
	MIN NM	MAX NM	MIN FT LB	MAX FT LB	R/MIN	MM		MM	LB	KG	IN	MM
1BB-1B011A-1K3MS-1VK3MS	2	11	1.48	8.1	1161	50	3/8" SQUARE DRIVE	35	10.1	4.6	18.3	464
1BB-1B030A-1K1M-1VK1M	5	32	3.69	23.6	439	50	3/8" SQUARE DRIVE	35	10.1	4.6	18.3	464
1BB-1B050A-1K2M-1VK2M	15	53	11.1	39.1	258	50	3/8" SQUARE DRIVE	35	10.1	4.6	18.3	464
2BB-2B100A-2K1M-2VK1M	25	110	18.5	81	831	50	1/2" SQUARE DRIVE	44	20.3	9.2	23.7	601
2BB-2B150A-2K2M-2VK2M	30	150	22.1	110.6	468	50	3/4" SQUARE DRIVE	44	20.3	9.2	23.7	601
3BB-3B180A-3K1M-3VK1M	30	180	22.1	133	315	50	3/4" SQUARE DRIVE	59	35.9	16.3	26.2	665
3BB-3B260A-3K2M-3VK2M	50	260	36.9	192	204	50	3/4" SQUARE DRIVE	59	35.9	16.3	26.2	665
4BB-4B360A-4K1M-4VK1M	120	360	89	266	249	50	3/4" SQUARE DRIVE	76	54	24.5	30.8	782
4BB-4B460A-4K2M-4VK2M	160	460	118	339	196	50	3/4" SQUARE DRIVE	76	54	24.5	30.8	782
4BB-4B630A-4K3M-4VK3M	220	630	162	465	133	50	1" SQUARE DRIVE	76	54	24.5	30.8	782
4BB-4B630A-4K3MS-4VK4MS	750	800	554	590	110	70	1" SQUARE DRIVE	76	52	23.5	30.8	782
4BB-4B630A-2/4K3MS-F13	400	1100	295	812	75	50	1" SQUARE DRIVE	85	52	23.5	36.2	919

Conventional Spindle - BUB Size 1-4 (2-1100 Nm) - Offset Drive - Reversible Gears - Single Torque Transducer - Single Angle Encoder

Single Torque transducer, Angle Encoder , Modular construction

- Long Service Life, Maximum Precision, High Accuracy
- Floating adapter not included with spindle

MODEL	TORQUE RANGE				FREE SPEED	FLOAT	DRIVE TYPE	MIN CENTER TO CENTER	WEIGHT		LENGTH	LENGTH
	MIN NM	MAX NM	MIN FT LB	MAX FT LB	R/MIN	MM		MM	LB	KG	IN	MM
1BUB-1B011A-1VK3MS	2	11	1.48	8.1	1161	50	3/8" SQUARE DRIVE	35	9.9	4.5	9.4	239
1BUB-1B030A-1VK1M	5	32	3.69	23.6	439	50	3/8" SQUARE DRIVE	35	9.9	4.5	9.4	239
1BUB-1B050A-1VK2M	15	53	11.1	39.1	258	50	3/8" SQUARE DRIVE	35	9.9	4.5	9.4	239
2BUB-2B100A-2VK1M	25	110	18.5	81	831	50	1/2" SQUARE DRIVE	44	20.1	9.1	13.1	333
2BUB-2B150A-2VK2M	30	150	22.1	110.6	468	50	3/4" SQUARE DRIVE	44	20.1	9.1	13.1	333
3BUB-3B180A-3VK1M	30	180	22.1	133	315	50	3/4" SQUARE DRIVE	59	35.5	16.1	14.2	361
3BUB-3B260A-3VK2M	50	260	36.9	192	204	50	3/4" SQUARE DRIVE	59	35.5	16.1	14.2	361
4BUB-4B360A-4VK1M	120	360	89	266	249	50	3/4" SQUARE DRIVE	76	51	23	18.2	463
4BUB-4B460A-4VK2M	160	460	118	339	196	50	3/4" SQUARE DRIVE	76	51	23	18.2	463
4BUB-4B630A-4VK3M	220	630	162	465	133	50	1" SQUARE DRIVE	76	51	23	18.2	463
4BUB-4B630A-4VK4MS	750	800	554	590	110	70	1" SQUARE DRIVE	76	52	23.5	18.2	463
4BUB-4B630A-4K3MS-F13	400	1100	295	812	75	50	1" SQUARE DRIVE	85	52	23.5	23.6	600

Conventional Spindle - BUB Size 1-4 (2-1100 Nm) - Offset Drive - Reversible Gears - Twin Torque Transducer - Angle Encoder

Twin Torque transducer, Twin Angle Encoder, Modular construction

- Long Service Life, Maximum Precision, High Accuracy
- Floating adapter not included with spindle

MODEL	TORQUE RANGE				FREE SPEED	FLOAT	DRIVE TYPE	MIN CENTER TO CENTER	WEIGHT		LENGTH	LENGTH
	MIN NM	MAX NM	MIN FT LB	MAX FT LB	R/MIN	MM		MM	LB	KG	IN	MM
1BUB-1B011A-1K3MS-1VK3MS	2	11	1.48	8.1	1161	50	3/8" SQUARE DRIVE	35	11.2	5.1	12.6	319
1BUB-1B030A-1K1M-1VK1M	5	32	3.69	23.6	439	50	3/8" SQUARE DRIVE	35	11.2	5.1	12.6	319
1BUB-1B050A-1K2M-1VK2M	15	53	11.1	39.1	258	50	3/8" SQUARE DRIVE	35	11.2	5.1	12.6	319
2BUB-2B100A-2K1M-2VK1M	25	110	18.5	81	831	50	1/2" SQUARE DRIVE	44	22.5	10.2	16.9	430
2BUB-2B150A-2K2M-2VK2M	30	150	22.1	110.6	468	50	3/4" SQUARE DRIVE	44	22.5	10.2	16.9	430
3BUB-3B180A-3K1M-3VK1M	30	180	22.1	133	315	50	3/4" SQUARE DRIVE	59	40.1	18.2	18.6	473
3BUB-3B260A-3K2M-3VK2M	50	260	36.9	192	204	50	3/4" SQUARE DRIVE	59	40.1	18.2	18.6	473
4BUB-4B360A-4K1M-4VK1M	120	360	89	266	249	50	3/4" SQUARE DRIVE	76	57	26	23.2	590
4BUB-4B460A-4K2M-4VK2M	160	460	118	339	196	50	3/4" SQUARE DRIVE	76	57	26	23.2	590
4BUB-4B630A-4K3M-4VK3M	220	630	162	465	133	50	1" SQUARE DRIVE	76	57	26	23.2	590
4BUB-4B630A-4K3M-4VK4MS	750	800	554	590	110	70	1" SQUARE DRIVE	76			23.2	590
4BUB-4B630A-2/4K3MS-F13	400	1100	295	812	75	50	1" SQUARE DRIVE	85			28.6	727

Conventional Spindle - BB Size 1-4 (2-630 Nm) - Angle Drive - Single Torque Transducer - Single Angle Encoder

Single Torque transducer, Angle Encoder , Modular construction

- Long Service Life, Maximum Precision, High Accuracy
- Floating adapter not included with spindle

MODEL	TORQUE RANGE				FREE SPEED	FLOAT	DRIVE TYPE	MIN CENTER TO CENTER	WEIGHT		LENGTH	LENGTH
	MIN NM	MAX NM	MIN FT LB	MAX FT LB	R/MIN	MM		MM	LB	KG	IN	MM
1BB-1B011A-1WK3MS	2	11	1.48	8.1	1146	25	3/8" SQUARE DRIVE	52	9.7	4.4	16.8	427
1BB-1B030A-1WK1M	5	32	3.69	23.6	434	25	3/8" SQUARE DRIVE	52	9.7	4.4	16.8	427
1BB-1B050A-1WK2M	15	53	11.1	39.1	255	25	3/8" SQUARE DRIVE	52	9.7	4.4	16.8	427
2BB-2B100A-2WK1M	25	110	18.5	81	838	25	1/2" SQUARE DRIVE	59	16.8	7.6	19.9	505
2BB-2B150A-2WK2M	30	150	22.1	110.6	472	25	3/4" SQUARE DRIVE	59	16.8	7.6	19.9	505
3BB-3B180A-3WK1M	30	180	22.1	133	327	25	3/4" SQUARE DRIVE	81	37.0	16.8	23.9	607
3BB-3B260A-3WK2M	50	260	36.9	192	211	25	3/4" SQUARE DRIVE	81	37.0	16.8	23.9	607
4BB-4B360A-4WK1M	120	360	89	266	257	25	3/4" SQUARE DRIVE	112	58	26.1	25.4	645
4BB-4B460A-4WK2M	160	460	118	339	202	25	1" SQUARE DRIVE	112	58	26.1	25.4	645
4BB-4B630A-4WK3M	220	630	162	465	136	25	1" SQUARE DRIVE	112	58	26.1	25.4	645

Conventional Spindle - BB Size 1-4 (2-630 Nm) - Angle Drive - Twin Torque Transducer - Twin Angle Encoder

Twin Torque Transducer, Twin Angle Encoder , Modular Construction

- Long Service Life, Maximum Precision, High Accuracy
- Floating adapter not included with spindle

MODEL	TORQUE RANGE				FREE SPEED	FLOAT	DRIVE TYPE	MIN CENTER TO CENTER	WEIGHT		LENGTH	LENGTH
	MIN NM	MAX NM	MIN FT LB	MAX FT LB	R/MIN	MM		MM	LB	KG	IN	MM
1BB-1B011A-1K3MS-1WK3MS	2	11	1.48	8.1	1146	25	3/8" SQUARE DRIVE	52	11.0	5	20.0	507
1BB-1B030A-1K1M-1WK1M	5	32	3.69	23.6	434	25	3/8" SQUARE DRIVE	52	11.0	5	20.0	507
1BB-1B050A-1K2M-1WK2M	15	53	11.1	39.1	255	25	3/8" SQUARE DRIVE	52	11.0	5	20.0	507
2BB-2B100A-2K1M-2WK1M	25	102	18.4	75.2	307	25	1/2" SQUARE DRIVE	59	19.2	8.7	23.7	602
2BB-2B150A-2K2M-2WK2M	30	150	22.13	110.6	307	25	1/2" SQUARE DRIVE	59	19.2	8.7	23.7	602
3BB-3B180A-3K1M-3WK1M	30	180	22.1	133	327	25	3/4" SQUARE DRIVE	81	41.7	18.9	28.3	719
3BB-3B260A-3K2M-3WK2M	50	260	36.9	192	211	25	3/4" SQUARE DRIVE	81	41.7	18.9	28.3	719
4BB-4B360A-4K1M-4WK1M	120	360	89	266	257	25	3/4" SQUARE DRIVE	112	64	29.1	30.4	772
4BB-4B460A-4K2M-4WK2M	160	460	118	339	202	25	1" SQUARE DRIVE	112	64	29.1	30.4	772
4BB-4B630A-4K3M-4WK3M	220	630	162	465	136	25	1" SQUARE DRIVE	112	64	29.1	30.4	772

Conventional Spindle - BUB Size 1-4 (2-630 Nm) - Angle Drive - Reversible Gears - Twin Torque Transducer - Twin Angle Encoder

Twin Torque transducer, Twin Angle Encoder , Modular construction

- Long Service Life, Maximum Precision, High Accuracy

MODEL	TORQUE RANGE				FREE SPEED	FLOAT	DRIVE TYPE	MIN CENTER TO CENTER	WEIGHT		LENGTH	LENGTH
	MIN NM	MAX NM	MIN FT LB	MAX FT LB	R/MIN	MM		MM	LB	KG	IN	MM
1BUB-1B011A-1K3MS-1WK3MS	2	11	1.48	8.1	1146	25	3/8" SQUARE DRIVE	52	12.1	5.5	14.3	362
1BUB-1B030A-1K1M-1WK1M	5	32	3.69	23.6	434	25	3/8" SQUARE DRIVE	52	12.1	5.5	14.3	362
1BUB-1B050A-1K2M-1WK2M	15	53	11.1	39.1	255	25	3/8" SQUARE DRIVE	52	12.1	5.5	14.3	362
2BUB-2B100A-2K1M-2WK1M	25	110	18.5	81	838	25	1/2" SQUARE DRIVE	59	21.4	9.7	17.0	432
2BUB-2B150A-2K2M-2WK2M	30	150	22.1	110.6	472	25	3/4" SQUARE DRIVE	59	19.2	8.7	23.7	602
3BUB-3B180A-3K1M-3WK1M	30	180	22.1	133	327	25	3/4" SQUARE DRIVE	81	46.1	20.9	20.7	527
3BUB-3B260A-3K2M-3WK2M	50	260	36.9	192	211	25	3/4" SQUARE DRIVE	81	46.1	20.9	20.7	527
4BUB-4B360A-4K1M-4WK1M	120	360	89	266	257	25	3/4" SQUARE DRIVE	112	68	30.7	22.8	580
4BUB-4B460A-4K2M-4WK2M	160	460	118	339	202	25	1" SQUARE DRIVE	112	68	30.7	22.8	580
4BUB-4B630A-4K3M-4WK3M	220	630	162	465	136	25	1" SQUARE DRIVE	112	68	30.7	22.8	580

Conventional Spindle - BUB Size 1-4 (2-630 Nm) - Angle Drive - Reversible Gears - Single Torque Transducer - Single Angle Encoder

Single Torque transducer, Angle Encoder , Modular construction

- Long Service Life, Maximum Precision, High Accuracy
- Floating adapter not included with spindle

MODEL	TORQUE RANGE				FREE SPEED	FLOAT	DRIVE TYPE	MIN CENTER TO CENTER	WEIGHT		LENGTH	LENGTH
	MIN NM	MAX NM	MIN FT LB	MAX FT LB	R/MIN	MM		MM	LB	KG	IN	MM
1BUB-1B011A-1WK3MS	2	11	1.48	8.1	1146	25	3/8" SQUARE DRIVE	52	10.8	4.9	11.1	282
1BUB-1B030A-1WK1M	5	32	3.69	23.6	434	25	3/8" SQUARE DRIVE	52	10.8	4.9	11.1	282
1BUB-1B050A-1WK2M	15	53	11.1	39.1	255	25	3/8" SQUARE DRIVE	52	10.8	4.9	11.1	282
2BUB-2B100A-2WK1M	25	110	18.5	81	838	25	1/2" SQUARE DRIVE	59	19.0	8.6	13.2	335
2BUB-2B150A-2WK2M	30	150	22.1	110.6	472	25	3/4" SQUARE DRIVE	59	19.0	8.6	13.2	335
3BUB-3B180A-3WK1M	30	180	22.1	133	327	25	3/4" SQUARE DRIVE	81	41.4	18.8	16.3	415
3BUB-3B260A-3WK2M	50	260	36.9	192	211	25	3/4" SQUARE DRIVE	81	41.4	18.8	16.3	415
4BUB-4B360A-4WK1M	120	360	89	266	257	25	3/4" SQUARE DRIVE	112	61	27.7	17.8	453
4BUB-4B460A-4WK2M	160	460	118	339	202	25	1" SQUARE DRIVE	112	61	27.7	17.8	453
4BUB-4B630A-4WK3M	220	630	162	465	136	25	1" SQUARE DRIVE	112	61	27.7	17.8	453

Conventional Spindle Cables - Type C

- Extremely flexible, direct connection between the nutsetter and nutsetter control unit in HighFlex quality

MODEL	LENGTH	LENGTH
	FT	M
960432-020	6.6	2
960432-040	13.1	4
960432-060	19.7	6
960432-100	32.8	10
960432-200	65.6	20
960432-300	98.4	30
960432-400	131.2	40
960432-500	164.1	50

PE cable for fastener plate 960408-xxx. Available in any length, preferred in 2 m grid.
The order number extension indicates the length of the cable in decimetres.
1960960-XXX must be used parallel to cable type B and C. 2960961-XXX must be used parallel to cable type A1 and A2

Conventional Spindle Cables - Type B

- Fixed cable in field quality from intermediate connection point to the nutsetter control unit

MODEL	LENGTH	LENGTH
	FT	M
960431-020	6.6	2
960431-040	13.1	4
960431-060	19.7	6
960431-100	32.8	10
960431-200	65.6	20
960431-300	98.4	30
960431-400	131.2	40
960431-500	164.1	50

PE cable for fastener plate 960408-xxx. Available in any length, preferred in 2 m grid.
The order number extension indicates the length of the cable in decimetres.
1960960-XXX must be used parallel to cable type B and C. 2960961-XXX must be used parallel to cable type A1 and A2

Conventional Spindle Cables For Second Torque Transducer

- For movable cables and extreme requirements, e.g. robot applications

MODEL	LENGTH	LENGTH
	FT	M
960960-020	6.6	2
960961-020	6.6	2
960960-040	13.1	4
960961-040	13.1	4
960960-060	19.7	6
960961-060	19.7	6
960960-100	32.8	10
960961-100	32.8	10
960960-200	65.6	20
960961-200	65.6	20
960960-300	98.4	30
960961-300	98.4	30
960960-400	131.2	40
960961-400	131.2	40
960960-500	164.1	50
960961-500	164.1	50

PE cable for fastener plate 960408-xxx. Available in any length, preferred in 2 m grid.
The order number extension indicates the length of the cable in decimetres.
1960960-XXX must be used parallel to cable type B and C. 2960961-XXX must be used parallel to cable type A1 and A2

Conventional Spindle Cables - Type A1

- Extremely flexible connection in HighFlex quality between nutsetter and intermediate connection point

MODEL	LENGTH	LENGTH
	FT	M
960430-020	6.6	2
960430-040	13.1	4
960430-060	19.7	6
960430-100	32.8	10
960430-200	65.6	20
960430-300	98.4	30
960430-400	131.2	40
960430-500	164.1	50

PE cable for fastener plate 960408-xxx. Available in any length, preferred in 2 m grid.
The order number extension indicates the length of the cable in decimetres.
1960960-XXX must be used parallel to cable type B and C. 2960961-XXX must be used parallel to cable type A1 and A2

Conventional Spindle Cables - Type A2

- Alternative to 960430-xxx for robot applications
- Extra-flexible connection between nutsetter and intermediate connection point in SuperHighFlex quality

MODEL	LENGTH	LENGTH
	FT	M
960433-020	6.6	2
960433-040	13.1	4
960433-060	19.7	6
960433-100	32.8	10
960433-200	65.6	20
960433-300	98.4	30
960433-400	131.2	40
960433-500	164.1	50

PE cable for fastener plate 960408-xxx. Available in any length, preferred in 2 m grid.
The order number extension indicates the length of the cable in decimetres.
1960960-XXX must be used parallel to cable type B and C. 2960961-XXX must be used parallel to cable type A1 and A2

Intelligent Spindle System Cable - Highflex Field Cable - Straight Connectors

- For fixed or flexible routing with heavy-duty requirements in applications with cable drag chain or standard robot applications.

MODEL	LENGTH	LENGTH
	FT	M
961104-030	9.8	3
961104-040	13.1	4
961104-050	16.4	5
961104-060	19.7	6
961104-070	23.0	7
961104-080	26.2	8
961104-090	29.5	9
961104-100	32.8	10
961104-150	49.2	15
961104-200	65.6	20
961104-300	98.4	30
961104-400	131.2	40
961104-500	164.1	50

Intelligent Spindle System Cable - Highflex UL CAS Field Cable - Straight Connectors

•

MODEL	LENGTH	LENGTH
	FT	M
961204-005	1.6	0.5
961204-010	32.8	10
961204-020	65.6	20
961204-100	328.1	100
961204-120	393.7	120
961204-150	492.2	150
961204-200	656.2	200
961204-300	984.3	300

Intelligent Spindle System Cable - Highflex UL CAS Field Cable - Angle to Straight Connectors

•

MODEL	LENGTH	LENGTH
	FT	M
96169-150	492.2	150

Highflex Jumper Cable with Straight Connectors

- Highflex Type D straight connector on both sides
- Moulded connector housing

MODEL	LENGTH	LENGTH
	FT	M
961104-005	1.6	0.5
961104-010	3.3	1
961104-020	6.6	2

DGD Floating Adaptor

MODEL	MOTOR SIZE	TORQUE RANGE MAX		X DIMENSION	OUTPUT DRIVE
		FT LB	NM	IN I MM	IN
910609	2	118	160	7.08 | 180	1/2 IN
910613	3	384	520	7.28 | 185	3/4 IN
912106	4	384	520	7.48 | 190	3/4 IN
912147	4	554	750	7.32 | 186	1 IN
916642	4	465	630	7.28 | 185	1 IN
916643	4	384	520	7.48 | 190	3/4 IN
922325PT	1	44.3	60	7.08 | 180	3/8 IN
935552	2	148	200	7.08 | 180	3/4 IN
S308441	4	1181	1600	5.31 | 140	1-1/2 IN
S976956	4	554	750	5.31 | 140	1 IN

DGD Floating Adaptor Including Flange Housing

MODEL	MOTOR SIZE	TORQUE RANGE MAX		X DIMENSION	OUTPUT DRIVE
		FT LB	NM	IN I MM	IN
S308434	1	44.3	60	6.61 | 168	3/8 IN
S308435	2	118	160	6.77 | 172	1/2 IN
S308436	3	384	520	6.92 | 176	3/4 IN
S308437	1	44.3	60	6.61 | 168	3/4 IN
S308438	2	81	110	6.55 | 166.5	1 IN
S308439	3	221	300	6.73 | 171	1-1/2 IN
S308440	4	384	520	6.88 | 175	1 IN
S308450	2	148	200	6.77 | 172	3/4 IN
S308474	4	487	660	6.73 | 171	3/4 IN
S308475	2	148	200	6.55 | 166.5	1 IN

DGD Floating Adaptor Including Flange Housing for Right Angle Drive

•

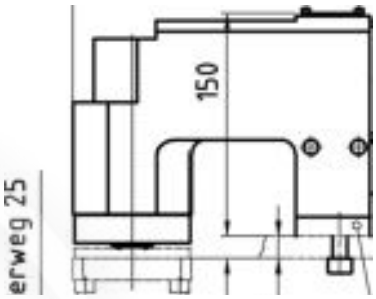

MODEL	MOTOR SIZE	TORQUE RANGE MAX		X DIMENSION	OUTPUT DRIVE
		FT LB	NM	IN I MM	IN
929041	1	44.3	60	2.95 | 75	3/8 IN
929053	2	125	170	3.54 | 90	1/2 IN
929061	2	148	200	4.52 | 115	3/4 IN
929065	3	221	300	4.13 | 105	3/4 IN
929077	4	384	520	4.52 | 115	3/4 IN
929089	4	487	660	4.52 | 115	1 IN

mPro400GCD-P Hybrid Primary Global Controller

For corded and cordless tools. Provides unsurpassed levels of flexibility, connectivity, and serviceability while providing superb torque accuracy and process control for safety-critical applications.

- Supports: NeoTek 30/50/70 Series, LiveWire, CellCore, CellTec, I-Wrench, 18/48/17/47/67 Series, and Conventional BB Spindles
- Transducer Controlled
- Controls up to 16 corded/cordless tools
- User friendly 8.5” interactive screen enables simple programming and quick access to tightening data
- Standard CompactFlash memory card stores up to 10,000* run downs and can be easily switched between controllers with a reboot time under a minute
- Remote programming software enables control of the production process from anywhere
- Future proof software/hardware architecture delivers Industry 4.0 capabilities
- Quick mount bracket enables quickly mounting and optimizes cord management

MODEL	TOOL COMPATIBILITY	HEIGHT	DEPTH	WIDTH	WEIGHT	
		IN	IN	IN	LB	KG
MPRO400G-CD-P	NEOTEK 30/50/70 SERIES | LIVEWIRE | CELLCORE | CELLTEC | I-WRENCH |18/48/17/47/67 SERIES | CONVENTIONAL BB SPINDLES	15	11.34	10.5	30.2	13.7

Note: 17/47/67 Series Tools require Adapter Cable 961789PT. 70 Series Tools require a 220/230 power supply to the controller

*Note: Larger capacity CompactFlash memory card can be added to increase number of stored run downs.

mPro400GCD-SH Hybrid Secondary Global Controller

Controlled from a Master or Primary Controller. Allows for expansion of up to 16 corded tools.

- Supports: NeoTek 30/50/70 Series, 18/48/17/47/67 Series, and Conventional BB Spindles
- Transducer Controlled
- Controls 1 corded tool with capacity for 15 Secondary Controllers to be added to a Primary or Master Controller
- User friendly 6” interactive screen enables quick access to tightening data
- Standard CompactFlash memory card stores up to 10,000* run downs and can be easily switched between controllers with a reboot time under a minute
- Future proof software/hardware architecture delivers Industry 4.0 capabilities
- Quick mount bracket enables quickly mounting and optimizes cord management

MODEL	TOOL COMPATIBILITY	HEIGHT	DEPTH	WIDTH	WEIGHT	
		IN	IN	IN	LB	KG
MPRO400G-CD-SH	NEOTEK 30/50/70 SERIES | 18/48/17/47/67 SERIES | CONVENTIONAL BB SPINDLES	13.4	11.34	10.5	28.2	12.8

Note: 17/47/67 Series Tools require Adapter Cable 961789PT. 70 Series Tools require a 220/230 power supply to the controller
*Note: Larger capacity CompactFlash memory card can be added to increase number of stored run downs.

mPro400GCD-M Hybrid Master Global Controller

For cordless tools and spindles. Provides unsurpassed levels of flexibility, connectivity, and serviceability while providing superb torque accuracy and process control for safety-critical applications.

- Supports: LiveWire, CellCore, CellTec, I-Wrench, and Intelligent Spindles
- Transducer Controlled
- Controls up to 16 cordless tools
- User friendly 8.5” interactive screen enables simple programming and quick access to tightening data
- Standard CompactFlash memory card stores up to 10,000* run downs and can be easily switched between controllers with a reboot time under a minute
- Remote programming software enables control of the production process from anywhere
- Future proof software/hardware architecture delivers Industry 4.0 capabilities
- Quick mount bracket enables quickly mounting and optimizes cord management

MODEL	TOOL COMPATIBILITY	HEIGHT	DEPTH	WIDTH	WEIGHT	
		IN	IN	IN	LB	KG
MPRO400G-CD-M	LIVEWIRE | CELLCORE | CELLTEC | I-WRENCH | INTELLIGENT SPINDLES	15	11.34	10.5	21.3	9.7

*Note: Larger capacity CompactFlash memory card can be added to increase number of stored run downs.

mPro200GC Controller

The mPro200 Controller can be connected to 10 Cleco cordless tools. Easily capture data in real time within a plant network.

- Compact - Save space on the line (4.5” vs. 10.5” on GCD400)
- Intelligent - 19 fastening strategies for all types of applications
- Easy to Use - Run remotely via mPro remote, or connect an external display using VGA output
- Standard CompactFlash memory card stores up to 10,000* run downs and can be easily switched between controllers with a reboot time under a minute
- Versatile - Compatible with CellCore, LiveWire and I-Wrench
- mPro200GC provided with North America 110V power cord only

MODEL	TOOL COMPATIBILITY	HEIGHT	DEPTH	WIDTH	WEIGHT	
		IN	IN	IN	LB	KG
MPRO200GC	LIVEWIRE | CELLCORE | I-WRENCH	13.4	12.6	4.4	7.1	3.23
MPRO200GC-G	LIVEWIRE | CELLCORE | I-WRENCH	13.4	12.6	4.4	7.1	3.23

*Note: Larger capacity CompactFlash memory card can be added to increase number of stored run downs.

mPro200GC-AP Controller with Access Point

The mPro200 Controller can be connected to 10 Cleco cordless tools. Easily capture data in real time within a plant network.

- Integrated access point
- Compact - Save space on the line (4.5” vs. 10.5” on GCD400)
- Intelligent - 19 fastening strategies for all types of applications
- Easy to Use - Run remotely via mPro remote, or connect an external display using VGA output
- Standard CompactFlash memory card stores up to 10,000* run downs and can be easily switched between controllers with a reboot time under a minute
- Versatile - Compatible with CellCore, LiveWire and I-Wrench
- mPro200GC provided with North America 110V power cord only

MODEL	TOOL COMPATIBILITY	HEIGHT	DEPTH	WIDTH	WEIGHT	
		IN	IN	IN	LB	KG
MPRO200GC-AP	LIVEWIRE | CELLCORE | I-WRENCH	13	12.6	4.4	7.5	3.43
MPRO200GC-AP-G	LIVEWIRE | CELLCORE | I-WRENCH	13	12.6	4.4	7.5	3.43

*Note: Larger capacity CompactFlash memory card can be added to increase number of stored run downs.

mPRO400 Global Controller & Panel (Size 1/2 for 1-32 channels)

- Cabinet size dependent on the number and size of DGD spindles.
- Control cabinet for spindle sizes 1/2, 1-32 channels

MODEL	TOOL COMPATIBILITY	HEIGHT	DEPTH	WIDTH
		IN	IN	IN
S112860-01-SG	SIZE 1 & 2 INTELLIGENT SPINDLES FOR 1-32 CHANNELS	79	23.6	23.6
S112860-02-SG	SIZE 1 & 2 INTELLIGENT SPINDLES FOR 1-32 CHANNELS	79	23.6	23.6
S112860-03-SG	SIZE 1 & 2 INTELLIGENT SPINDLES FOR 1-32 CHANNELS	79	23.6	23.6
S112860-04-SG	SIZE 1 & 2 INTELLIGENT SPINDLES FOR 1-32 CHANNELS	79	23.6	23.6
S112860-05-SG	SIZE 1 & 2 INTELLIGENT SPINDLES FOR 1-32 CHANNELS	79	23.6	23.6
S112860-06-SG	SIZE 1 & 2 INTELLIGENT SPINDLES FOR 1-32 CHANNELS	79	23.6	23.6
S112860-07-SG	SIZE 1 & 2 INTELLIGENT SPINDLES FOR 1-32 CHANNELS	79	23.6	23.6
S112860-08-SG	SIZE 1 & 2 INTELLIGENT SPINDLES FOR 1-32 CHANNELS	79	23.6	23.6
S112860-09-SG	SIZE 1 & 2 INTELLIGENT SPINDLES FOR 1-32 CHANNELS	79	47.2	47.2
S112860-10-SG	SIZE 1 & 2 INTELLIGENT SPINDLES FOR 1-32 CHANNELS	79	47.2	47.2
S112860-11-SG	SIZE 1 & 2 INTELLIGENT SPINDLES FOR 1-32 CHANNELS	79	47.2	47.2
S112860-12-SG	SIZE 1 & 2 INTELLIGENT SPINDLES FOR 1-32 CHANNELS	79	47.2	47.2
S112860-13-SG	SIZE 1 & 2 INTELLIGENT SPINDLES FOR 1-32 CHANNELS	79	47.2	47.2
S112860-14-SG	SIZE 1 & 2 INTELLIGENT SPINDLES FOR 1-32 CHANNELS	79	47.2	47.2
S112860-15-SG	SIZE 1 & 2 INTELLIGENT SPINDLES FOR 1-32 CHANNELS	79	47.2	47.2
S112860-16-SG	SIZE 1 & 2 INTELLIGENT SPINDLES FOR 1-32 CHANNELS	79	47.2	47.2
S112860-17-SG	SIZE 1 & 2 INTELLIGENT SPINDLES FOR 1-32 CHANNELS	79	71	71
S112860-18-SG	SIZE 1 & 2 INTELLIGENT SPINDLES FOR 1-32 CHANNELS	79	71	71
S112860-19-SG	SIZE 1 & 2 INTELLIGENT SPINDLES FOR 1-32 CHANNELS	79	71	71
S112860-20-SG	SIZE 1 & 2 INTELLIGENT SPINDLES FOR 1-32 CHANNELS	79	71	71
S112860-21-SG	SIZE 1 & 2 INTELLIGENT SPINDLES FOR 1-32 CHANNELS	79	71	71
S112860-22-SG	SIZE 1 & 2 INTELLIGENT SPINDLES FOR 1-32 CHANNELS	79	71	71
S112860-23-SG	SIZE 1 & 2 INTELLIGENT SPINDLES FOR 1-32 CHANNELS	79	71	71
S112860-24-SG	SIZE 1 & 2 INTELLIGENT SPINDLES FOR 1-32 CHANNELS	79	71	71
S112860-25-SG	SIZE 1 & 2 INTELLIGENT SPINDLES FOR 1-32 CHANNELS	79	71	71
S112860-26-SG	SIZE 1 & 2 INTELLIGENT SPINDLES FOR 1-32 CHANNELS	79	71	71
S112860-27-SG	SIZE 1 & 2 INTELLIGENT SPINDLES FOR 1-32 CHANNELS	79	71	71
S112860-28-SG	SIZE 1 & 2 INTELLIGENT SPINDLES FOR 1-32 CHANNELS	79	71	71
S112860-29-SG	SIZE 1 & 2 INTELLIGENT SPINDLES FOR 1-32 CHANNELS	79	94	94
S112860-30-SG	SIZE 1 & 2 INTELLIGENT SPINDLES FOR 1-32 CHANNELS	79	94	94
S112860-31-SG	SIZE 1 & 2 INTELLIGENT SPINDLES FOR 1-32 CHANNELS	79	94	94
S112860-32-SG	SIZE 1 & 2 INTELLIGENT SPINDLES FOR 1-32 CHANNELS	79	94	94

mPRO400 Global Controller & Panel (Size 3/4 for 1 -32 channels)

- Cabinet size dependent on the number and size of DGD spindles.
- Control cabinet for spindle sizes 3/4, 1-32 channels

MODEL	TOOL COMPATIBILITY	HEIGHT	DEPTH	WIDTH
		IN	IN	IN
S112861-01-SG	SIZE 3 & 4 INTELLIGENT SPINDLES FOR 1-32 CHANNELS	79	23.6	23.6
S112861-02-SG	SIZE 3 & 4 INTELLIGENT SPINDLES FOR 1-32 CHANNELS	79	23.6	23.6
S112861-03-SG	SIZE 3 & 4 INTELLIGENT SPINDLES FOR 1-32 CHANNELS	79	23.6	23.6
S112861-04-SG	SIZE 3 & 4 INTELLIGENT SPINDLES FOR 1-32 CHANNELS	79	23.6	23.6
S112861-05-SG	SIZE 3 & 4 INTELLIGENT SPINDLES FOR 1-32 CHANNELS	79	23.6	23.6
S112861-06-SG	SIZE 3 & 4 INTELLIGENT SPINDLES FOR 1-32 CHANNELS	79	23.6	23.6
S112861-07-SG	SIZE 3 & 4 INTELLIGENT SPINDLES FOR 1-32 CHANNELS	79	23.6	23.6
S112861-08-SG	SIZE 3 & 4 INTELLIGENT SPINDLES FOR 1-32 CHANNELS	79	23.6	23.6
S112861-09-SG	SIZE 3 & 4 INTELLIGENT SPINDLES FOR 1-32 CHANNELS	79	47.2	47.2
S112861-10-SG	SIZE 3 & 4 INTELLIGENT SPINDLES FOR 1-32 CHANNELS	79	47.2	47.2
S112861-11-SG	SIZE 3 & 4 INTELLIGENT SPINDLES FOR 1-32 CHANNELS	79	47.2	47.2
S112861-12-SG	SIZE 3 & 4 INTELLIGENT SPINDLES FOR 1-32 CHANNELS	79	47.2	47.2
S112861-13-SG	SIZE 3 & 4 INTELLIGENT SPINDLES FOR 1-32 CHANNELS	79	47.2	47.2
S112861-14-SG	SIZE 3 & 4 INTELLIGENT SPINDLES FOR 1-32 CHANNELS	79	47.2	47.2
S112861-15-SG	SIZE 3 & 4 INTELLIGENT SPINDLES FOR 1-32 CHANNELS	79	47.2	47.2
S112861-16-SG	SIZE 3 & 4 INTELLIGENT SPINDLES FOR 1-32 CHANNELS	79	47.2	47.2
S112861-17-SG	SIZE 3 & 4 INTELLIGENT SPINDLES FOR 1-32 CHANNELS	79	71	71
S112861-18-SG	SIZE 3 & 4 INTELLIGENT SPINDLES FOR 1-32 CHANNELS	79	71	71
S112861-19-SG	SIZE 3 & 4 INTELLIGENT SPINDLES FOR 1-32 CHANNELS	79	71	71
S112861-20-SG	SIZE 3 & 4 INTELLIGENT SPINDLES FOR 1-32 CHANNELS	79	71	71
S112861-21-SG	SIZE 3 & 4 INTELLIGENT SPINDLES FOR 1-32 CHANNELS	79	71	71
S112861-22-SG	SIZE 3 & 4 INTELLIGENT SPINDLES FOR 1-32 CHANNELS	79	71	71
S112861-23-SG	SIZE 3 & 4 INTELLIGENT SPINDLES FOR 1-32 CHANNELS	79	71	71
S112861-24-SG	SIZE 3 & 4 INTELLIGENT SPINDLES FOR 1-32 CHANNELS	79	71	71
S112861-25-SG	SIZE 3 & 4 INTELLIGENT SPINDLES FOR 1-32 CHANNELS	79	71	71
S112861-26-SG	SIZE 3 & 4 INTELLIGENT SPINDLES FOR 1-32 CHANNELS	79	71	71
S112861-27-SG	SIZE 3 & 4 INTELLIGENT SPINDLES FOR 1-32 CHANNELS	79	71	71
S112861-28-SG	SIZE 3 & 4 INTELLIGENT SPINDLES FOR 1-32 CHANNELS	79	71	71
S112861-29-SG	SIZE 3 & 4 INTELLIGENT SPINDLES FOR 1-32 CHANNELS	79	94	94
S112861-30-SG	SIZE 3 & 4 INTELLIGENT SPINDLES FOR 1-32 CHANNELS	79	94	94
S112861-31-SG	SIZE 3 & 4 INTELLIGENT SPINDLES FOR 1-32 CHANNELS	79	94	94
S112861-32-SG	SIZE 3 & 4 INTELLIGENT SPINDLES FOR 1-32 CHANNELS	79	94	94

mPro400SG Global Controllers for Intelligent Spindles

- Graphic Interface
- Fully Programmable
- Local storage of 10,000 cycles
- LAN Capable
- Fieldbus options available

MODEL	TOOL COMPATIBILITY	HEIGHT	DEPTH	WIDTH
		IN	IN	IN
S112849-SG	CONVENTION SPINDLES - SIZE 1&2 1.2/01-CHANNEL	14.2	11	18.9
S112850-SG	CONVENTION SPINDLES - SIZE 1&2 1.2/01-CHANNEL	14.9	13.8	30
S112870-SG	CONVENTIONAL SPINDLES - SIZE 3&4 3/4 01-CHANNEL	14.9	13.8	30
S112871-SG	CONVENTIONAL SPINDLES - SIZE 3&4 3/4 01-CHANNEL	14.9	13.8	30

TSnet Cable

- Used to connect mPro400GCD-P, mPro400GCD-SH or mPro400G-CD-M controllers

MODEL	DESCRIPTION
962037-002	.2 METER TSNET CABLE
962037-005	.5 METER TSNET CABLE
962037-010	1 METER TSNET CABLE
962037-020	2 METER TSNET CABLE
962037-030	3 METER TSNET CABLE
962037-040	4 METER TSNET CABLE
962037-050	5 METER TSNET CABLE
962037-100	10 METER TSNET CABLE
962037-200	20 METER TSNET CABLE
962037-300	30 METER TSNET CABLE
962037-500	50 METER TSNET CABLE

RJ45 to TSnet Cable

- Use to connect a mPro400GC-P or mPro400GC-M controller to a mPro400GCD-SH controller

MODEL	DESCRIPTION
S981511	2 METER RJ45 TO TSNET CABLE
S981511-030	3 METER RJ45 TO TSNET CABLE
S981511-050	5 METER RJ45 TO TSNET CABLE

Anybus Ethernet IP

- For use in mPro400 and mPro200 Series controllers

MODEL	DESCRIPTION
544172PT	ANYBUS ETHERNET IP

Anybus Profibus

- For use in mPro400 and mPro200 Series controllers

MODEL	DESCRIPTION
544173PT	ANYBUS PROFIBUS

Anybus Profinet

- For use in mPro400 and mPro200 Series controllers

MODEL	DESCRIPTION
544174PT	ANYBUS PROFINET

Anybus TCP Modbus

- For use in mPro400 and mPro200 Series controllers

MODEL	DESCRIPTION
544211PT	ANYBUS TCP MODBUS MODULE

System Bus Termination Plug

- For use with system bus accessories and mPro400GC-S controllers

MODEL	DESCRIPTION
544197PT	SYSTEM BUS TERMINATOR

System Bus Cables

- Used to connect system bus accessories to mPro400 series controllers
- Used to connect Pro400GC-P, mPro400GC-S or mPro400GC-M controllers

MODEL	DESCRIPTION	LENGTH	LENGTH
		FT	M
544196-005	SYSTEM BUS CABLE - 0.5M	1.6	0.5
544196-020	SYSTEM BUS CABLE - 2M	6.6	2
544196-050	SYSTEM BUS CABLE - 5M	16.4	5
544196-200	SYSTEM BUS CABLE - 20M	65.6	20
544196-500	SYSTEM BUS CABLE - 50M	164.1	50

16 I/O System Bus Expander

- Connects through system bus port
- Provides 16 additional 24v I/O connections

MODEL	DESCRIPTION
S133437	SYSTEM BUS 16 I/O EXPANDER

4 & 8 Position Socket Tray

- Connects through system bus port
- Quick and simple setup
- Can be networked with up to 31 additional accessories

MODEL	DESCRIPTION
S133410	SYSTEM BUS 4-POSITION SOCKET TRAY
S133411	SYSTEM BUS 8-POSITION SOCKET TRAY
S970716	REPLACEMENT INSERTS

Stack Light With Buzzer

- Connects through system bus port
- Quick and simple setup
- Can be networked with up to 31 additional accessories

MODEL	DESCRIPTION
S133420	SYSTEM BUS STACK LIGHT WITH BUZZER

mProRemote

Integrated software that enables programming of application parameters for a controller remotely

- Access controllers remotely from a networked PC or laptop
- Provides mirrored screen images of what operator on plant floor is seeing
- Monitor rundown results, make programming changes, and perform diagnostics in real-time

MODEL	DESCRIPTION
MPROREMOTE	PROVIDED WITH EACH MPRO400GC-M & MPRO400GC-P
TM-COM	PROVIDED WITH EACH MPRO400GC-E & MPRO400GC-I

TorqueNet - Software Solutions

Enables data collection and analytics by making the plant floor data visible anywhere using an internet browser.

- Make your plant floor data visible anywhere using an internet browser
- Data is sent to a single location making critical production information accessible to all users within the tightening process on the assembly line
- Easily compare traces against known good traces
- Provides preventative maintenance notifications

MODEL	DESCRIPTION	MIN. DISK SPACE	MIN. OPERATING SYSTEM	MIN. PROCESSOR SPEED	MIN. RAM	MIN. VIRTUAL MEMORY	PRICE METHOD
S168171-NT-4	TORQUENET ENTERPRISE SINGLE SPINDLE	30 GB	WINDOWS SERVER 2008 - 2012 WINDOWS 7/10	1.2 GHZ	4 GB	8 GB	PER SPINDLE
S168171-PR-4	TORQUENET PROFESSIONAL SINGLE SPINDLE	30 GB	WINDOWS SERVER 2008 - 2012 WINDOWS 7/10	1.2 GHZ	4 GB	8 GB	PER SPINDLE
S168171-ST-4	TORQUENET STANDARD SINGLE SPINDLE	30 GB	WINDOWS SERVER 2008 - 2012 WINDOWS 7/10	1.2 GHZ	4 GB	8 GB	PER SPINDLE
S168696-ST-1	OPEN PROTOCOL DC - TORQUENET ADD-ON	30 GB	WINDOWS SERVER 2008 - 2012 WINDOWS 7/10	1.2 GHZ	4 GB	8 GB	PER SPINDLE

TPS - Software Solutions

Enables full control of tightening applications used across a plant or over multiple plants, effectively minimizing opportunities for costly issues.

- Central Application Management for efficiently managing tightening applications from a central location
- Provide real-time change management
- Application archiving and rollback capabilities
- Full control of tightening applications across one or multiple plants
- Accurately stores all controller information into a central database

MODEL	DESCRIPTION	MIN. DISK SPACE	MIN. OPERATING SYSTEM	MIN. PROCESSOR SPEED	MIN. RAM	MIN. VIRTUAL MEMORY	PRICE METHOD
S168689-ST-2	TIGHTENING PARAMETER SERVER (TPS) SINGLE SPINDLE	30 GB	WINDOWS SERVER 2008 - 2012 WINDOWS 7/10	1.2 GHZ	4 GB	8 GB	PER SPINDLE

Dashboard - Software Solutions

Improves analysis speed and performance through enabling comprehensive data analysis that is critical to manufacturing operations.

- Empowers with the ability to explore data through customized views
- User specific views enables quick navigation
- Share data to make decisions and take action
- Stay engaged with the production process by creating your own KPI's

MODEL	DESCRIPTION	MIN. DISK SPACE	MIN. OPERATING SYSTEM	MIN. PROCESSOR SPEED	MIN. RAM	MIN. VIRTUAL MEMORY	PRICE METHOD
S168703-ST-1	DASHBOARD MANAGER	30 GB	WINDOWS SERVER 2008 - 2012 WINDOWS 7/10	1.2 GHZ	4 GB	8 GB	PER SPINDLE

2 CPU cores or more recommended. Additional disk space may be required depending on total number of spindles.
TorqueNet Standard to Pro and TorqueNet Standard to Enterprise upgrade packages are also available. TorqueNet Pro to Enterprise upgrade package available. Please contact your Cleco Sales Representative for more details.

MP Series - Impacting Drivers

Smooth and efficient impacting mechanism creates no reaction for the operator

- Smooth and efficient impacting mechanism creates no reaction for the operator
- One-hand forward reverse switch
- Rugged metal housing and components outlasts the competition
- Efficient and balanced design maximizes accessibility while minimizing operator fatigue

MODEL	TORQUE RANGE MAX		BLOWS PER MINUTE	FREE SPEED	AIR CONSUMPTION	WEIGHT	DRIVE SIZE	DRIVE TYPE	AIR INLET SIZE
	FT LB	NM		R/MIN	SCFM	LB	IN		IN
MP2264B	111	150	2000	10000	33.0	2.16	1/4"	HEX QUICK CHANGE	1/4
MP2265B	111	150	2000	10000	33.0	2.16	3/8"	PIN-DETENT SQUARE	1/4

MP Series - Inline Impacting Driver

Smooth and efficient impacting mechanism creates no reaction for the operator

- Smooth and efficient impacting mechanism creates no reaction for the operator
- One-hand forward reverse switch
- Rugged metal housing and components outlasts the competition
- Efficient and balanced design maximizes accessibility while minimizing operator fatigue

MODEL	TORQUE RANGE MAX		BLOWS PER MINUTE	FREE SPEED	AIR CONSUMPTION	WEIGHT	DRIVE SIZE	DRIVE TYPE	AIR INLET SIZE
	FT LB	NM		R/MIN	SCFM	LB	IN		IN
MP2271	65	88.1	900	10500	22.0	2.20	3/8"	SQUARE	1/4

CV Composite Series - Impact Wrench

Excellent combination of performance, comfort, and value

- Excellent combination of performance, comfort, and value
- Powerful twin hammer mechanism
- Variable speed trigger
- Light-weight and ergonomically balanced
- Ideal for general industrial production, maintenance, and overhaul

MODEL	TORQUE RANGE MAX		BREAKAWAY TORQUE	BLOWS PER MINUTE	FREE SPEED	AIR CONSUMPTION	WEIGHT	DRIVE SIZE	DRIVE TYPE	AIR INLET SIZE
	FT LB	NM	FT LB		R/MIN	SCFM	LB	IN		IN
CV-375P	420	569.4	511	1600	8000	32.0	2.91	3/8”	PIN ANVIL OR PIN HOLE	1/4
CV-375R	420	569.4	511	1600	8000	32.0	2.91	3/8”	RETAINING RING	1/4
CV-500P	780	1058	1100	1200	8500	40.5	4.8	1/2”	PIN ANVIL OR PIN HOLE	1/4
CV-500R	780	1058	1100	1200	8500	40.5	4.8	1/2”	RETAINING RING	1/4
CV-750P	1300	1763	1501	1000	5500	64	8.2	3/4”	PIN ANVIL OR PIN HOLE	3/8
CV-750P-8	1300	1763	1501	1000	5500	64	8.3	1”	PIN ANVIL OR PIN HOLE	3/8

CWC Premium Composite Series - Impact Wrench

Ultimate combination of power, durability, and features

- Ultimate combination of power, durability, and features
- Triple heat treated twin hammer mechanism
- Variable speed trigger
- User-preferred one-hand direction control
- Ideal for heavy industries and fast-paced production environments

MODEL	TORQUE RANGE MAX		BREAKAWAY TORQUE	BLOWS PER MINUTE	FREE SPEED	AIR CONSUMPTION	WEIGHT	DRIVE SIZE	DRIVE TYPE	AIR INLET SIZE
	FT LB	NM	FT LB		R/MIN	SCFM	LB	IN		IN
CWC-250QC	50	68	75	1200	13000	19.5	1.90	1/4”	QUICK CHANGE	1/4
CWC-250R	50	68	75	1200	13000	19.5	1.90	1/4”	RETAINING RING	1/4
CWC-375P	450	610	550	1600	10000	37.5	2.91	3/8”	PIN ANVIL OR PIN HOLE	1/4
CWC-375R	450	610	550	1600	10000	37.5	2.91	3/8”	RETAINING RING	1/4
CWC-375R-4	450	610	550	1600	10000	37.5	2.91	1/2”	RETAINING RING	1/4
CWC-500P	800	1085	1180	1250	8000	40.5	4.41	1/2”	PIN ANVIL OR PIN HOLE	1/4
CWC-500R	800	1085	1180	1250	8000	40.5	4.41	1/2”	RETAINING RING	1/4
CWC-750P	1401	1898	1800	1200	6500	69	7.6	3/4”	PIN ANVIL OR PIN HOLE	3/8

CWM Metal Housing Series - Impact Wrench

Engineered to outperform the competition in the harshest environments

- Engineered to outperform the competition in the harshest environments
- Triple heat treated twin hammer mechanism
- Variable speed trigger
- Durable all-metal housing
- Ideal for heavy industries and demanding envrionments

MODEL	TORQUE RANGE MAX		BREAKAWAY TORQUE	BLOWS PER MINUTE	FREE SPEED	AIR CONSUMPTION	WEIGHT	DRIVE SIZE	DRIVE TYPE	AIR INLET SIZE
	FT LB	NM	FT LB		R/MIN	SCFM	LB	IN		IN
CWM-375P	340	450	450	1400	12000	26.9	3.31	3/8"	PIN ANVIL OR PIN HOLE	1/4
CWM-375R	340	450	450	1400	12000	26.9	3.31	3/8"	RETAINING RING	1/4
CWM-500P	850	1200	1201	1200	9000	39.8	5.8	1/2"	PIN ANVIL OR PIN HOLE	1/4
CWM-500R	850	1200	1201	1200	9000	39.8	5.8	1/2"	RETAINING RING	1/4
CWM-750P	1350	2339	1726	1200	6000	54	10.4	3/4"	PIN ANVIL OR PIN HOLE	3/8

WP Metal Housing Series

- Heavy-duty patented telescoping impact mechanism delivers durable performance with minimal reaction to the operator
- Rugged thru-bolt construction eliminates stripped housing threads and expensive repairs
- Positive oil-foam lubrication reduces maintenance and repair costs
- Durable sand casted housing and steel impact housing withstands abusive environments
- Ideal for heavy industries and harsh conditions

MODEL	TORQUE RANGE MAX		BREAKAWAY TORQUE	BLOWS PER MINUTE	FREE SPEED	AIR CONSUMPTION	WEIGHT	DRIVE SIZE	DRIVE TYPE	AIR INLET SIZE
	FT LB	NM	FT LB		R/MIN	SCFM	LB	IN		IN
WP-2059-8-6E	750	1016.9	1501	1000	4000	60	14.2	1"	SQUARE	3/8
WP-2059-8	801	1084.7	1501	1000	4000	60	12.1	1"	SQUARE	3/8
WP-2110B-8	1651	2237.1	2502	880	4600	100	20.7		SQUARE	1/2

WT Metal Housing Series -Impact Wrench

Heavy-duty patented telescoping impact mechanism delivers durable performance with minimal reaction to the operator

- Heavy-duty patented telescoping impact mechanism delivers durable performance with minimal reaction to the operator
- Rugged thru-bolt construction eliminates stripped housing threads and expensive repairs
- Positive oil-foam lubrication reduces maintenance and repair costs
- Durable sand casted housing and steel impact housing withstands abusive environments
- Ideal for heavy industries and harsh conditions

MODEL	TORQUE RANGE MAX		BREAKAWAY TORQUE	BLOWS PER MINUTE	FREE SPEED	AIR CONSUMPTION	WEIGHT	DRIVE SIZE	DRIVE TYPE	AIR INLET SIZE
	FT LB	NM	FT LB		R/MIN	SCFM	LB	IN		IN
WT-2109-8	1651	2237.1	2502	880	4300	100	21.0	1”	SQUARE	1/2
WT-2119-12	2602	3525.1	3502	820	3300	105	29.0	1-1/2”	SQUARE	1/2
WTS-2119	2502	3389.6	3502	820	3300	105	29.0	#5	SPLINE	1/2

TULMan Electronic Counter

Cycle or Run Time Counter for Small Pneumatic Tools Up to 20cfm / 570 lpm

- First ever odometer and tripometer for small pneumatic tools
- Useable on any small pneumatic device with suitable air flow, including Cleco & Dotco products
- Manage tool service and tool calibration, quantify & compare tool consumable life
- Monitor workforce productivity, improve quality of product or process and realize cost savings
- LED indicator lights blink yellow (warning) and red as cycle and run time limits are reached.
- Easy-to-use monitoring software included
- Tamper-proof cover for micro-USB access

MODEL	MAX PRESSURE	MAX FLOW	MIN FLOW	WEIGHT
	LB/IN² I BAR	CFM I L/MIN	CFM I L/MIN	LB
240461PT	100 LB/IN² I 6.9 BAR	20 I 570	5 I 145	0.176

H Series 4-120Nm Torque - Pistol Grip - Shut-Off Model - Cleco

Market leading repeatability unmatched accuracy, low maintenance, inertia shut-off, low noise level, efficient 3 chamber air motor, external speed control, oil less blades reversible torque signal port

- Durable, Economical low maintenance

Model Number Nomenclature

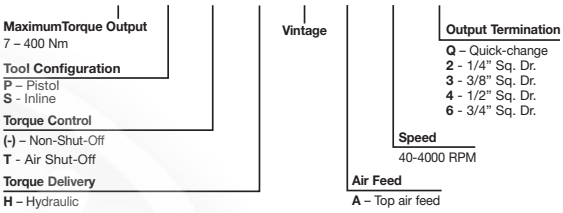

MODEL	DRIVE TYPE	TORQUE RANGE				FREE SPEED	WEIGHT	AIR CONSUMPTION		
		MIN FT LB	MAX FT LB	MIN NM	MAX NM	R/MIN	LB	NPT	HOSE I.D.	SCFM
7PTHH352	SQUARE	2.95	2.95	5.2	7	3500	1.74	1/4	3/8	7.06
7PTHH35Q	QUICK CHANGE	2.95	2.95	5.2	7	3500	1.74	1/4	3/8	7.06
7PTHHA352	SQUARE	2.95	2.95	5.2	7	3500	1.94	1/4	3/8	7.06
7PTHHA35Q	QUICK CHANGE	2.95	2.95	5.2	7	3500	1.94	1/4	3/8	7.06
20PTHH403*	SQUARE	14.8	14.8	25.1	34	4000	1.90	1/4	1/2	8.70
20PTHH40Q	QUICK CHANGE	14.8	14.8	25.1	34	4000	1.92	1/4	1/2	8.70
20PTHHA403*	SQUARE	14.8	14.8	25.1	34	4000	2.03	1/4	1/2	8.70
20PTHHA40Q	QUICK CHANGE	14.8	14.8	25.1	34	4000	2.05	1/4	1/2	8.70
35PTHH40Q	QUICK CHANGE	14.8	14.8	25.8	35	4000	2.31	1/4	1/2	15.90
35PTHHA403*	SQUARE	14.8	14.8	25.8	35	4000	2.45	1/4	1/2	15.90
35PTHHA40Q	QUICK CHANGE	14.8	14.8	25.8	35	4000	2.45	1/4	1/2	15.90
55PTHH403*	SQUARE	22.1	22.1	40.6	55	4000	2.54	1/4	1/2	15.90
55PTHHA403*	SQUARE	22.1	22.1	40.6	55	4000	2.67	1/4	1/2	15.90
80PTHH354	SQUARE	36.9	36.9	59	80	3500	3.09	1/4	3/8	19.40
80PTHH35Q	QUICK CHANGE	36.9	36.9	59	80	3500	3.20	1/4	3/8	19.40
80PTHHA354	SQUARE	36.9	36.9	59	80	3500	3.31	1/4	3/8	19.40
80PTHHA35Q	QUICK CHANGE	36.9	36.9	59	80	3500	3.33	1/4	3/8	19.40
110PTHH30Q	QUICK CHANGE	55	55	81	110	3000	3.75	3/8	1/2	19.40
110PTHHA30Q	QUICK CHANGE	55	55	81	110	3000	3.86	3/8	1/2	19.40
11PTHH352*	SQUARE	4.43	4.43	81	110	3500	1.81	1/4	3/8	7.06
11PTHH353*	SQUARE	4.43	4.43	81	110	3500	1.83	1/4	3/8	7.06
11PTHH35Q	QUICK CHANGE	4.43	4.43	81	110	3500	1.87	1/4	3/8	7.06
11PTHHA352*	SQUARE	4.43	4.43	81	110	3500	1.94	1/4	3/8	7.06
11PTHHA353*	SQUARE	4.43	4.43	81	110	3500	1.96	1/4	3/8	7.06
11PTHHA35Q	QUICK CHANGE	4.43	4.43	81	110	3500	2.01	1/4	3/8	7.06
120PTHH304	SQUARE	55	55	89	120	3000	3.75	3/8	1/2	19.40
120PTHHA304	SQUARE	55	55	89	120	3000	3.86	3/8	1/2	19.40

* 7/16" QUICK CHANGE CHUCK AVAILABLE SEPARATELY AS AN ACCESSORY

H series - Pistol Grip - Non Shut-Off Model 4-120Nm Torque - Cleco

Durable, Economical low maintenance low noise levels efficient air motor external speed control, external speed control, oil less blades reversible

- Durable, Economical low maintenance

MODEL	DRIVE TYPE	TORQUE RANGE				FREE SPEED	WEIGHT	AIR CONSUMPTION		
		MIN FT LB	MAX FT LB	MIN NM	MAX NM	R/MIN	LB	NPT	HOSE I.D.	SCFM
7PHH602	SQUARE	2.95	2.95	5.2	7	6000	1.70	1/4	3/8	8.7
7PHH60Q	QUICK CHANGE	2.95	2.95	5.2	7	6000	1.74	1/4	3/8	8.7
7PHHA602	SQUARE	2.95	2.95	5.2	7	6000	1.81	1/4	3/8	8.7
7PHHA60Q	QUICK CHANGE	2.95	2.95	5.2	7	6000	1.85	1/4	3/8	8.7
11PHH652	SQUARE	4.43	4.43	8.1	11	6500	1.72	1/4	3/8	10.5
11PHH653*	SQUARE	4.43	4.43	8.1	11	6500	1.74	1/4	3/8	10.5
11PHH65Q	QUICK CHANGE	4.43	4.43	8.1	11	6500	1.76	1/4	3/8	10.5
11PHHA652	SQUARE	4.43	4.43	8.1	11	6500	1.85	1/4	3/8	10.5
11PHHA653*	SQUARE	4.43	4.43	8.1	11	6500	1.85	1/4	3/8	10.5
11PHHA65Q	QUICK CHANGE	4.43	4.43	8.1	11	6500	1.96	1/4	3/8	10.5
20PHH753*	SQUARE	7.4	7.4	14.8	20	7500	1.85	1/4	3/8	17.3
20PHH75Q	QUICK CHANGE	7.4	7.4	14.8	20	7500	1.90	1/4	3/8	17.3
20PHHA753*	SQUARE	7.4	7.4	14.8	20	7500	1.94	1/4	3/8	17.3
20PHHA75Q	QUICK CHANGE	7.4	7.4	14.8	20	7500	2.03	1/4	3/8	17.3
35PHH653*	SQUARE	14.8	14.8	25.8	35	6500	2.25	1/4	3/8	19.4
35PHH65Q	QUICK CHANGE	14.8	14.8	25.8	35	6500	2.29	1/4	3/8	15.9
35PHHA653*	SQUARE	14.8	14.8	25.8	35	6500	2.36	1/4	3/8	19.4
35PHHA65Q	QUICK CHANGE	14.8	14.8	25.8	35	6500	2.43	1/4	3/8	15.9
55PHH603*	SQUARE	22.1	22.1	40.6	55	6000	2.47	1/4	3/8	22.9
55PHHA603*	SQUARE	22.1	22.1	40.6	55	6000	2.58	1/4	3/8	22.9
80PHH604	SQUARE	36.9	36.9	59	80	6000	3.09	1/4	3/8	26.5
80PHH60Q	QUICK CHANGE	36.9	36.9	59	80	6000	3.11	1/4	3/8	26.5
80PHHA604	SQUARE	36.9	36.9	59	80	6000	3.20	1/4	3/8	26.5
80PHHA60Q	QUICK CHANGE	36.9	36.9	59	80	6000	3.24	1/4	3/8	26.5
110PHH55Q	QUICK CHANGE	55	55	81	110	5500	3.66	3/8	1/2	30
110PHHA55Q	QUICK CHANGE	55	55	81	110	5500	3.79	3/8	1/2	30
120PHH554	SQUARE	55	55	89	120	5500	3.64	3/8	1/2	30
120PHHA554	SQUARE	55	55	89	120	5500	3.75	3/8	1/2	30

* 7/16" QUICK CHANGE CHUCK AVAILABLE SEPARATELY AS AN ACCESSORY

C Series - High Torque Pistol Grip Non-Shut-off 100-400 nm Torque - Cleco

Durable, Economical low maintenance low noise levels efficient air motor external speed control, oil less blades reversible

- Durable, Economical low maintenance

MODEL	DRIVE TYPE	TORQUE RANGE				FREE SPEED	WEIGHT	AIR CONSUMPTION		
		MIN FT LB	MAX FT LB	MIN NM	MAX NM	R/MIN	LB	NPT	HOSE I.D.	SCFM
140PH45Q	QUICK CHANGE	74	74	103	140	4500	5.7	3/8	1/2	31.7
160PH456	SQUARE	74	74	118	160	4500	5.7	3/8	1/2	31.7
250PHAF406	SQUARE	118	118	185	250	4000	8.6	3/8	1/2	40.6
400PHF356	SQUARE	185	185	295	400	3500	11.5	3/8	1/2	42.3

C Series 100-160Nm Torque - Pistol Grip - Shut-Off Model - Cleco

Durable, Economical low maintenance low noise levels, external speed control efficient air motor reversible torque signal port

- Durable, Economical low maintenance

MODEL	DRIVE TYPE	TORQUE RANGE				FREE SPEED	WEIGHT	AIR CONSUMPTION		
		MIN FT LB	MAX FT LB	MIN NM	MAX NM	R/MIN	LB	NPT	HOSE I.D.	SCFM
140PTHC25Q	QUICK CHANGE	74	74	103	140	2500	5.7	3/8	1/2	25.4
160PTHC256	SQUARE	74	74	118	160	2500	5.7	3/8	1/2	25.4

C series 160-250Nm Torque - Pistol Grip - Shut-Off Model - Trigger Throttle - Cleco

Durable, Economical low maintenance low noise levels, external speed control efficient air motor reversibletorque signal port

- Durable, Economical low maintenance
- Motor governor equipped
- External torque adjustment
- External speed control
- Reversible
- Oilless blades
- Torque Signal port

MODEL	DRIVE TYPE	TORQUE RANGE				FREE SPEED	WEIGHT	AIR CONSUMPTION		
		MIN FT LB	MAX FT LB	MIN NM	MAX NM	R/MIN	LB	NPT	HOSE I.D.	SCFM
250PTHFC226	SQUARE	118	118	185	250	2200	8.8	3/8	1/2	33.5
400PTHFC206	SQUARE	185	185	295	400	2000	11.7	3/8	1/2	33.5

In-Line - Push-to-Start - 2.6-35Nm Torque - Cleco

Durable, Economical low maintenance low noise levels, external speed control, efficient air motor, reversible, torque signal port

- Durable, Economical low maintenance

MODEL	DRIVE TYPE	TORQUE RANGE				FREE SPEED	WEIGHT	AIR CONSUMPTION		
		MIN FT LB	MAX FT LB	MIN NM	MAX NM	R/MIN	LB	NPT	HOSE I.D.	SCFM
7STHFA55Q	QUICK CHANGE	1.92	1.92	4.9	6.6	5500	1.83	1/8	1/4	7
35STHFA404	SQUARE	11.1	11.1	25.8	35	4000	2.87	1/4	3/8	15.9
35STHFA40Q	QUICK CHANGE	11.1	11.1	25.8	35	4000	3.09	1/4	3/8	15.9

Pulse Tools - Rubber Tool Stand

Rubber tool stand for pulse tools.

MODEL	DESCRIPTION
930119	RUBBER TOOL STAND FOR C SERIES 140 / 160PTH / PH / 250PTH / 400PTH
931041	RUBBER TOOL STAND FOR D & H SERIES 7PTH – 120PTH

Pulse Tools - TVP-100 - Torque Signal Kit

For indicating shut-off

MODEL	DESCRIPTION
934918	AIR SIGNAL TO INDICATE SHUT-OFF

PTH Series pulse tools and vintage shut-off tools only

Pulse Tools - 7/16” Quick Change Chuck Adapter

Converts to quick-change chuck

MODEL	DESCRIPTION
935472	TO CONVERT 11/20/35/55PTHH/PTHHA/PHH/PHHA TO A QUICK-CHANGE CHUCK

Pulse Tools - Vibration Absorber

MODEL	DESCRIPTION
935965	FITS MODEL 35/55PTHHA/PHHA
935966	FITS MODEL 80/110/120PTHHA/PHHA

Pulse Tools - Covers

MODEL	DESCRIPTION
937442PT	PROTECTIVE COVER FOR 7/11/20PTHHA/7/11/20PHHA
937443PT	PROTECTIVE COVER FOR 35PTHHA/35PHHA
937444PT	PROTECTIVE COVER FOR 55PTHHA/55PHHA
937445PT	PROTECTIVE COVER FOR 80PTHHA/80PHHA
937446PT	PROTECTIVE COVER FOR 110/120PTHHA/110/120PHHA
937447PT	PROTECTIVE COVER FOR 7/11/20PTHH/7/11/20PHH
937448PT	PROTECTIVE COVER FOR 35PTHH/35PHH
937449PT	PROTECTIVE COVER FOR 55PTHH/55PHH
937450PT	PROTECTIVE COVER FOR 80PTHH/80PHH
937451PT	PROTECTIVE COVER FOR 110/120PTHH/110/120PHH

I-Wrench - Rubber Protection - WIFI Module - Auto Head Recognition

Designed for use in safety and quality critical applications.

- Accurate - Improve product quality with torque accuracy of +/-0.5%
- Ergonomic - Increase productivity and user comfort with lightweight design
- Intelligent - Error proof processes with operator guidance and controller integration
- Versatile - Use on production lines, rework stations, and repair bays
- Compatible with mPro400 and mPro200 Series controllers

MODEL	DESCRIPTION	BARCODE READER	TORQUE RANGE MAX		OUTPUT DRIVE	LENGTH	WEIGHT	
			FT LB	NM	IN I MM	IN	LB	KG
313110030	RUBBER PROTECTION WITH DISPLAY PROTECTION							
PRW-0015-0110-WI	CLECO LIVEWIRE I-WRENCH 15	NO	11.1	15	9 X 12	15.5	1.76	0.80
PRW-0030-0110-WI	CLECO LIVEWIRE I-WRENCH 30	NO	22.1	30	9 X 12	15.5	1.90	0.86
PRW-0070-0110-WI	CLECO LIVEWIRE I-WRENCH 70	NO	52	70	9 X 12	19.6	2.05	0.93
PRW-0100-0110-WI	CLECO LIVEWIRE I-WRENCH 100	NO	74	100	9 X 12	19.6	2.05	0.93
PRW-0200-0110-WI	CLECO LIVEWIRE I-WRENCH 200	NO	148	200	14 X 18	24.8	3.31	1.50
PRW-0300-0110-WI	CLECO LIVEWIRE I-WRENCH 300	NO	221	300	14 X 18	30.7	4.10	1.86
PRW-0400-0110-WI	CLECO LIVEWIRE I-WRENCH 400	NO	295	400	14 X 18	34.6	4.41	2.00
PRW-0600-0110-WI	CLECO LIVEWIRE I-WRENCH 600	NO	443	600	14 X 18	41.6	8.0	3.65
PRW-0800-0110-WI	CLECO LIVEWIRE I-WRENCH 800	NO	590	800	Ø 20	52	11.2	5.10
PRW-1000-0110-WI	CLECO LIVEWIRE I-WRENCH 1,000	NO	738	1000	Ø 20	63	13.8	6.25
PRW-1200-0110-WI	CLECO LIVEWIRE I-WRENCH 1,200	NO	886	1200	Ø 30	68	15.4	7.00

I-Wrench - Barcode Reader- Rubber Protection - WIFI Module - Auto Head Recognition

Designed for use in safety and quality critical applications.

- Accurate - Improve product quality with torque accuracy of +/-0.5%
- Ergonomic - Increase productivity and user comfort with lightweight design
- Intelligent - Error proof processes with operator guidance and controller integration
- Versatile - Use on production lines, rework stations, and repair bays
- Compatible with mPro400 and mPro200 Series controllers

MODEL	DESCRIPTION	BARCODE READER	TORQUE RANGE MAX		OUTPUT DRIVE	LENGTH	WEIGHT	
			FT LB	NM	IN I MM	IN	LB	KG
PRW-0015-1110-WI	CLECO LIVEWIRE I-WRENCH 15	YES	11.1	15	9 X 12	15.5	1.76	0.80
PRW-0030-1110-WI	CLECO LIVEWIRE I-WRENCH 30	YES	22.1	30	9 X 12	15.5	1.90	0.86
PRW-0070-1110-WI	CLECO LIVEWIRE I-WRENCH 70	YES	52	70	9 X 12	19.6	2.05	0.93
PRW-0100-1110-WI	CLECO LIVEWIRE I-WRENCH 100	YES	74	100	9 X 12	19.6	2.05	0.93
PRW-0200-1110-WI	CLECO LIVEWIRE I-WRENCH 200	YES	148	200	14 X 18	24.8	3.31	1.50
PRW-0300-1110-WI	CLECO LIVEWIRE I-WRENCH 300	YES	221	300	14 X 18	30.7	4.10	1.86
PRW-0400-1110-WI	CLECO LIVEWIRE I-WRENCH 400	YES	295	400	14 X 18	34.6	4.41	2.00
PRW-0600-1110-WI	CLECO LIVEWIRE I-WRENCH 600	YES	443	600	14 X 18	41.6	8.0	3.65
PRW-0800-1110-WI	CLECO LIVEWIRE I-WRENCH 800	YES	590	800	Ø 20	52	11.2	5.10
PRW-1000-1110-WI	CLECO LIVEWIRE I-WRENCH 1,000	YES	738	1000	Ø 20	63	13.8	6.25
PRW-1200-1110-WI	CLECO LIVEWIRE I-WRENCH 1,200	YES	886	1200	Ø 30	68	15.4	7.00

I-Wrench - Open End Heads

- For applications with limited clearance or fixed bolt sizes.
- Includes built-in programmable chip for application error-proofing.

MODEL	DESCRIPTION	TORQUE RANGE MAX	
		FT LB	NM
197170030	13 MM 9 X 12	148	200
197179027	TR 10 MM 9 X 12	148	200
197179030	TR 13 MM 9 X 12	148	200
197170034	17 MM 9 X 12	184	250
197170036	19 MM 9 X 12	184	250
197179031	TR 14 MM 9 X 12	184	250
197179034	TR 17 MM 9 X 12	184	250
197179036	TR 19 MM 9 X 12	184	250
197170041	17 MM 14 X 18	258	350
197170046	24 MM 14 X 18	258	350
197170048	27 MM 14 X 18	258	350
197170049	30 MM 14 X 18	258	350
197179038	TR 14 MM 14 X 18	258	350
197179043	TR 19 MM 14 X 18	258	350
197179046	TR 24 MM 14 X 18	258	350
197179048	TR 27 MM 14 X 18	258	350

I-Wrench - Ratchet Heads

- Allows for quick and easy changing of various sized sockets.
- Includes built-in programmable chip for application error-proofing.

MODEL	DESCRIPTION	TORQUE RANGE MAX	
		FT LB	NM
197120147	BLANK END INSERT TOOL 14 X 18		
197170146	BLANK END INSERT TOOL 9 X 12		
197170001	9 X 12 - 1/4" SQUARE DRIVE	29.5	40
197179001	TR 9 X 12 - 1/4" SQUARE DRIVE	29.5	40
197170002	9 X 12 - 3/8" SQUARE DRIVE	73.8	100
197170003	9 X 12 - 1/2" SQUARE DRIVE	73.8	100
197179002	TR 9 X 12 - 3/8" SQUARE DRIVE	73.8	100
197179003	TR 9 X 12 - 1/2" SQUARE DRIVE	73.8	100
197170005	14 X 18 - 1/2" SQUARE DRIVE	221	300
197170004	14 X 18 - 3/4" SQUARE DRIVE	479.4	650
197179004	TR 14 X 18 - 3/4" SQUARE DRIVE	479	650
197170007	Ø 20 - 3/4" SQUARE DRIVE	774	1050
197170008	Ø 28 - 1" SQUARE DRIVE	959	1300
197179005	TR 14 X 18 - 1/2" SQUARE DRIVE	221	300

I-Wrench - Programming

- Used to program applications to ratchet heads and open end attachments with embedded chip.

MODEL	DESCRIPTION
197140013	HEAD RECOGNITION PROGRAMMING UNIT
333110016	CHIP/TAG FOR HEAD RECOGNITION

I-Wrench - Charging

- Charging cradle includes mounting bracket.

MODEL	DESCRIPTION
197140030	EXTERNAL BATTERY CHARGER FOR 1 BATTERY WITH J21
197990008	USB CABLE 2M
313210281	LI-ION BATTERY 3.7V
197130020	TOOL CHARGING CRADLE FOR CLECO LIVEWIRE I-WRENCH 15/30 NM WITH RUBBER PROTECTION
197130021	TOOL CHARGING CRADLE FOR CLECO LIVEWIRE I-WRENCH 70/100 NM WITH RUBBER PROTECTION
197130022	TOOL CHARGING CRADLE FOR CLECO LIVEWIRE I-WRENCH 200 NM WITH RUBBER PROTECTION
197130023	TOOL CHARGING CRADLE FOR CLECO LIVEWIRE I-WRENCH 300 NM WITH RUBBER PROTECTION
197130024	TOOL CHARGING CRADLE FOR CLECO LIVEWIRE I-WRENCH 400 NM WITH RUBBER PROTECTION
197130025	TOOL CHARGING CRADLE FOR CLECO LIVEWIRE I-WRENCH 600 NM WITH RUBBER PROTECTION
197130026	TOOL CHARGING CRADLE FOR CLECO LIVEWIRE I-WRENCH 800 NM WITH RUBBER PROTECTION
197130027	TOOL CHARGING CRADLE FOR CLECO LIVEWIRE I-WRENCH 1,000 NM WITH RUBBER PROTECTION

Choose the right Air Motor to fit your application

Rotary Vane Air Motors

Apex Tool Group offers two types of rotary vane air motors, the large Cleco MR series (1.0 to 7.5 hp) with spring loaded blades and small to medium sizes (.14 to 2.3 hp). All motors feature durable construction with precision heavy-duty bearings throughout, and multiple blade rotors for smooth power. There is a wide range of speeds and torques as well as a choice of foot, face, or flange mounting. These motors require air line lubrication for long, trouble-free service. Mount the lubricator as close to the motor as possible. These motors perform satisfactorily in high temperature areas up to 200°F (93° C).

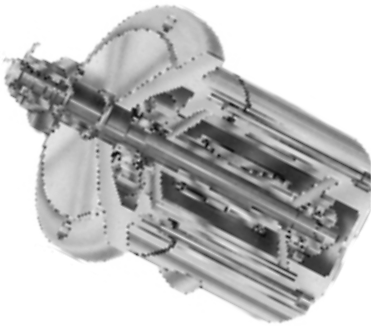

Rotary Vane

Rotary Vane

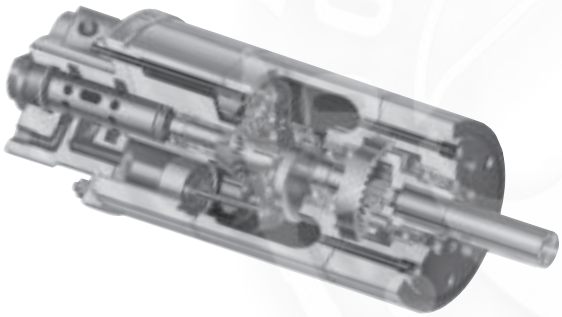

Axial Piston

Axial Piston

These small, lightweight Cleco motors are ideal for installation in close quarters. The rugged construction and precision manufacturing of these motors allows long life with minimum maintenance. Generous size spindle bearings permit overhung weight on spindle with no external support. Their enclosed type construction allows operation in corrosive or dusty atmospheres. These motors perform satisfactorily in high temperature areas up to 200° (93° C). Grease fittings are provided for lubrication. It is recommended that air lines be equipped with filters and lubricators. Mount the lubricator as close to the motor as possible.

Radial Piston

Heavy-duty construction make these motors suitable for continuous operation. The counterbalanced crankshaft is supported by anti-friction bearings. A slinger distributes oil to all moving parts of the motor. Oil level and drain plugs are easily accessible. These motors perform satisfactorily in high temperature areas up to 200° (93° C). It is recommended that air lines be equipped with lubricators. Mount the lubricator as close to the motor as possible.

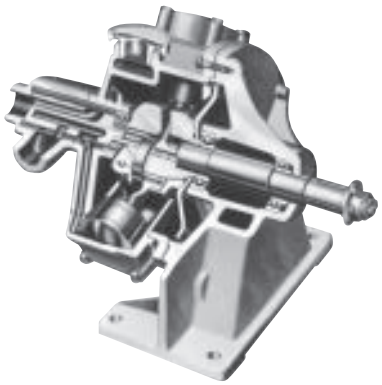

Radial Piston

Air Motor Selection

To assist in the selection of an air motor, we need any two of the following three items of information:

1. Horsepower required.
2. Speed (RPM) required against load.
3. Work load expressed in foot pounds or inch pounds of dynamic torque (moving torque load).

As air motors are dependent upon input air pressure for performance, these factors must also be considered:

1. Air pressure (psig or bars) at motor location.
2. Pipe size of air supply system to assure adequate volume (cfm or m^3/min) so as to minimize line loss (air pressure drop during motor operation).
3. Plant air system pressure may vary during the day due to use by other equipment; therefore, base the selection of the air motor on the lowest psig or bars that can be expected. Then, by using a pressure regulator in the line at the motor, a uniform air supply is assured.

In applications of intermittent short service, Cleco air motors can be operated over the complete range indicated for each without harm or significant wear. In applications involving sustained continuous operation for long periods, however, some guidelines are suggested. Do not operate piston and MR motors at more than 75% of free speed. Consult the factory for applications requiring continuous operation of rotary vane motors at maximum HP or for any applications requiring vertical operation of these motors. Review service manuals carefully.

For two known and one unknown, the following formulas can be used:

$$\text{Ft. lbs. Torque} = \frac{1000 \times \text{HP}}{0.19 \times \text{RPM}}$$

$$\text{Horsepower (HP)} = \frac{0.19 \times \text{Torque (ft. lbs.)} \times \text{RPM}}{1000}$$

$$\text{Speed (RPM)} = \frac{1000 \times \text{HP}}{0.19 \times \text{Torque (ft. lbs.)}}$$

When working with Newton meters (Nm), substitute .0258 in place of 0.19 in the formula.

Use the performance charts provided for each motor size and type for obtaining this same date procedure:

1. Select operating pressure.
2. Select torque required from the left hand scale.

   * Torque and horsepower curves may be interpreted for approximate performance at other psi pressure.
3. Extend that point position across chart until it intersects with torque performance curve of the selected pressure.
4. Draw a vertical line from the above mentioned intersection to the corresponding motor scale at the bottom of the chart to determine the operating speed at the required torque and psig pressure.
5. Extend the vertical line until it intersects the horsepower curve of selected operating pressure and read horsepower from the motor scale on the right side of the chart.

21 Series - Air Motor - Rotary Vane - Rear Exhaust

Maximum Power 0.3 hp | 0.22 kw

- Maximum Power 0.3 hp | 0.22 kw
- Torque Range 0.2 - 15.2 ft. lbs. | 0.27 - 20.6 Nm
- Non-Reversible
- Rear Exhaust

MODEL	MOUNT	SPINDLE TYPE	RPM AT MAX HP	FREE SPEED	TORQUE STALL	WEIGHT		GEAR RATIO	LENGTH	HORSEPOWER	AIR CONSUMPTION	CONTROL
			R/MIN	R/MIN	FT LB | NM	LB	KG		IN | MM	HP	SCFM	
21M1041-49	FLANGE AND BASE MOUNTING	3/8 IN KEYED SPINDLE	300	600	9.9 | 13.41	2.1	0.95	44.82-1	5.66 | 144	0.3	12	NON-REVERSIBLE
21M1340-49	FLANGE AND BASE MOUNTING	3/8 IN KEYED SPINDLE	1600	3200	1.8 | 2.44	2.1	0.95	8.3-1	4.34 | 110	0.3	12	NON-REVERSIBLE
21-1041-49	ROUND	3/8 IN KEYED SPINDLE	300	600	9.9 | 13.41	2.1	0.95	44.82-1	5.66 | 144	0.3	12	NON-REVERSIBLE
21-1340-49	ROUND	3/8 IN KEYED SPINDLE	1600	3200	1.8 | 2.44	2.1	0.95	8.3-1	4.34 | 110	0.3	12	NON-REVERSIBLE
21-1940-49	ROUND	3/8 IN KEYED SPINDLE	15000	30000	0.2 | 0.27	2.1	0.95	1-1	3 | 76.2	0.3	12	NON-REVERSIBLE
21M1540-49	FLANGE AND BASE MOUNTING	3/8 IN KEYED SPINDLE	2500	5000	1.2 | 1.63	2.1	0.95	5.4-1	4.34 | 110	0.3	12	NON-REVERSIBLE

Air Inlet: 1/4" NPT – Side and rear
All tools performance rated @ 90psi (620 kPa) air pressure.
*Optional Terminations:
Replace -49 in model number with the desired termination when ordering.
-38 0"-1/4" Capacity Drill Chuck (5000 RPM or less)
-51 1/16"-3/8" Capacity Drill Chuck (5000 RPM or less)
-40 3/8"-24 Threaded Spindle
-01 Series 200 Collet Chuck (for milling and routing)
-36 Series 300 Collet Chuck (for milling and routing)
Standard Equipment:
Hex socket screw provided for closure of unused inlet. Flush fitting for lubrication of gears. Wrench for threaded spindle and collet chuck models. 1/4" collet included with series 200 & 300 collet chuck.
Optional Equipment:
Any series 200 collet may be substituted at no additional cost. On series 300 collet chuck, collets 301, 302, and 303 are available at extra cost.
**Please visit clecotools.com for dimensional diagrams and power curves.

21 Series - Air Motor - Rotary Vane - Side Exhaust

Maximum Power 0.3 hp | 0.22 kw

- Maximum Power 0.3 hp | 0.22 kw
- Torque Range 0.2 - 15.2 ft. lbs. | 0.27 - 20.6 Nm
- Non-Reversible
- Side Exhaust

MODEL	MOUNT	SPINDLE TYPE	RPM AT MAX HP	FREE SPEED	TORQUE STALL	GEAR RATIO	LENGTH	HORSEPOWER	AIR CONSUMPTION	CONTROL
			R/MIN	R/MIN	FT LB | NM		IN | MM	HP	SCFM	
21M1000-49	FLANGE AND BASE MOUNTING	3/8 IN KEYED SPINDLE	190	380	15.2 | 20.6	68.9-1	5.66 | 144	0.3	12	NON-REVERSIBLE
21M1002-49	FLANGE AND BASE MOUNTING	3/8 IN KEYED SPINDLE	450	900	6.4 | 8.67	29.1-1	5.66 | 144	0.3	12	NON-REVERSIBLE
21-1900-49	ROUND	3/8 IN KEYED SPINDLE	15000	30000	0.2 | 0.27	1-1	3 | 76.2	0.3	12	NON-REVERSIBLE
21M1300-49	FLANGE AND BASE MOUNTING	3/8 IN KEYED SPINDLE	1600	3200	1.8 | 2.44	8.3-1	4.34 | 110	0.3	12	NON-REVERSIBLE

Air Inlet: 1/4" NPT – Side and rear
All tools performance rated @ 90psi (620 kPa) air pressure.
*Optional Terminations:
Replace -49 in model number with the desired termination when ordering.
-38 0"-1/4" Capacity Drill Chuck (5000 RPM or less)
-51 1/16"-3/8" Capacity Drill Chuck (5000 RPM or less)
-40 3/8"-24 Threaded Spindle
-01 Series 200 Collet Chuck (for milling and routing)
-36 Series 300 Collet Chuck (for milling and routing)
Standard Equipment:
Hex socket screw provided for closure of unused inlet. Flush fitting for lubrication of gears. Wrench for threaded spindle and collet chuck models. 1/4" collet included with series 200 & 300 collet chuck.
Optional Equipment:
Any series 200 collet may be substituted at no additional cost. On series 300 collet chuck, collets 301, 302, and 303 are available at extra cost.
**Please visit clecotools.com for dimensional diagrams and power curves.

22 Series - Air Motor - Rotary Vane - Rear Exhaust

Maximum Power 0.9 hp | 0.67 kw

- Maximum Power 0.9 hp | 0.67 kw
- Torque Range 0.8 - 41.2 ft. lbs. | 1.08 - 55.83 Nm
- Non-Reversible
- Rear Exhaust

MODEL	MOUNT	SPINDLE TYPE	RPM AT MAX HP	FREE SPEED	TORQUE STALL	WEIGHT		GEAR RATIO	LENGTH	HORSEPOWER	AIR CONSUMPTION	CONTROL
			R/MIN	R/MIN	FT LB | NM	LB	KG		IN | MM	HP	SCFM	
22M5042-50	FLANGE AND BASE MOUNTING	1/2 IN KEYED SPINDLE	470	940	19.6 | 26.56	2.1	0.95	24-1	7.94 | 202	0.9	29	NON-REVERSIBLE
22M5340-50	FLANGE AND BASE MOUNTING	1/2 IN KEYED SPINDLE	1600	3200	5.8 | 7.86	2.1	0.95	7.1-1	6.19 | 157	0.9	29	NON-REVERSIBLE
22M5440-50	FLANGE AND BASE MOUNTING	1/2 IN KEYED SPINDLE	2350	4700	4.0 | 5.42	2.1	0.95	4.9-1	6.19 | 157	0.9	29	NON-REVERSIBLE
22-5040-50	ROUND	1/2 IN KEYED SPINDLE	215	430	41.2 | 55.83	2.1	0.95	50.4-1	7.94 | 202	0.9	29	NON-REVERSIBLE
22-5041-50	ROUND	1/2 IN KEYED SPINDLE	320	640	28.4 | 38.48	2.1	0.95	34.8-1	7.94 | 202	0.9	29	NON-REVERSIBLE
22-5042-50	ROUND	1/2 IN KEYED SPINDLE	470	940	19.6 | 26.56	2.1	0.95	24-1	7.94 | 202	0.9	29	NON-REVERSIBLE
22-5340-50	ROUND	1/2 IN KEYED SPINDLE	1600	3200	5.8 | 7.86	2.1	0.95	7.1-1	6.19 | 157	0.9	29	NON-REVERSIBLE
22-5940-50	ROUND	1/2 IN KEYED SPINDLE	11500	23000	0.8 | 1.08	2.1	0.95	1-1	4.38 | 111	0.9	29	NON-REVERSIBLE
22M5940-50	FLANGE AND BASE MOUNTING	1/2 IN KEYED SPINDLE	11500	23000	0.8 | 1.08	2.1	0.95	1-1	4.38 | 111	0.9	29	NON-REVERSIBLE

Air Inlet: 1/4" NPT – Side and rear
Air consumption: 29 cfm (.82 m3/min)
All tools performance rated @ 90psi (620 kPa) air pressure.
*Optional Terminations:
Replace -50 in model number with the desired termination when ordering.
-38 0"-1/4" Capacity Drill Chuck (5000 RPM or less)
-51 1/16"-3/8" Capacity Drill Chuck (5000 RPM or less)
-53 5/64"-1/2" Capacity Drill Chuck (5000 RPM or less)
-60 1/2"-20 Threaded Spindle
-01 Series 200 Collet Chuck (for milling and routing)
-62 Series "K" Collet Chuck (for milling and routing)
Standard Equipment:
Hex socket screw provided for closure of unused inlet. Flush fitting for lubrication of gears. Wrench for threaded spindle and collet chuck models. 1/4" collet included with series 200 & "K" collet chuck.
Optional Equipment:
Any series 200 and "K" collet may be substituted at no additional cost.
**Please visit clecotools.com for dimensional diagrams and power curves.

22 Series - Air Motor - Rotary Vane - Side Exhaust

Maximum Power 0.9 hp | 0.67 kw

- Maximum Power 0.9 hp | 0.67 kw
- Torque Range 0.8 - 41.2 ft. lbs. | 1.08 - 55.83 Nm
- Non-Reversible
- Side Exhaust

MODEL	MOUNT	SPINDLE TYPE	RPM AT MAX HP	FREE SPEED	TORQUE STALL	WEIGHT		GEAR RATIO	LENGTH	HORSEPOWER	AIR CONSUMPTION	CONTROL
			R/MIN	R/MIN	FT LB | NM	LB	KG		IN | MM	HP	SCFM	
22M5000-50	FLANGE AND BASE MOUNTING	1/2 IN KEYED SPINDLE	215	430	41.2 | 55.83	2.1	0.95	50.4-1	7.94 | 202	0.9	29	NON-REVERSIBLE
22-5000-50	ROUND	1/2 IN KEYED SPINDLE	215	430	41.2 | 55.83	2.1	0.95	50.4-1	7.94 | 202	0.9	29	NON-REVERSIBLE
22M5002-50	FLANGE AND BASE MOUNTING	1/2 IN KEYED SPINDLE	470	940	19.6 | 26.56	2.1	0.95	24-1	7.94 | 202	0.9	29	NON-REVERSIBLE

Air Inlet: 1/4" NPT – Side and rear
Air consumption: 29 cfm (.82 m3/min)
All tools performance rated @ 90psi (620 kPa) air pressure.
*Optional Terminations:
Replace -50 in model number with the desired termination when ordering.
-38 0"-1/4" Capacity Drill Chuck (5000 RPM or less)
-51 1/16"-3/8" Capacity Drill Chuck (5000 RPM or less)
-53 5/64"-1/2" Capacity Drill Chuck (5000 RPM or less)
-60 1/2"-20 Threaded Spindle
-01 Series 200 Collet Chuck (for milling and routing)
-62 Series "K" Collet Chuck (for milling and routing)
Standard Equipment:
Hex socket screw provided for closure of unused inlet. Flush fitting for lubrication of gears. Wrench for threaded spindle and collet chuck models. 1/4" collet included with series 200 & "K" collet chuck.
Optional Equipment:
Any series 200 and "K" collet may be substituted at no additional cost.
**Please visit clecotools.com for dimensional diagrams and power curves.

22 Series - Air Motor - Rotary Vane - Reversible

Maximum Power 0.7 hp | 0.52 kw

- Maximum Power 0.7 hp | 0.52 kw
- Torque Range 0.6 - 28.4 ft. lbs. | 0.81 - 38.48 Nm
- Reversible
- Side Exhaust

MODEL	MOUNT	SPINDLE TYPE	RPM AT MAX HP	FREE SPEED	TORQUE STALL	WEIGHT		GEAR RATIO	LENGTH	HORSEPOWER	AIR CONSUMPTION	CONTROL
			R/MIN	R/MIN	FT LB I NM	LB	KG		IN I MM	HP	SCFM	
22M5070-50	FLANGE AND BASE MOUNTING	1/2 IN KEYED SPINDLE	165	330	28.4 | 38.48	2.1	0.95	50.4-1	7.88 | 200	0.7	29	REVERSIBLE
22M5071-50	FLANGE AND BASE MOUNTING	1/2 IN KEYED SPINDLE	250	500	19.6 | 26.56	2.1	0.95	34.8-1	7.88 | 200	0.7	29	REVERSIBLE
22M5072-50	FLANGE AND BASE MOUNTING	1/2 IN KEYED SPINDLE	350	700	13.5 | 18.29	2.1	0.95	24-1	7.88 | 200	0.7	29	REVERSIBLE
22-5070-50	ROUND	1/2 IN KEYED SPINDLE	165	330	28.4 | 38.48	2.1	0.95	50.4-1	7.88 | 200	0.7	29	REVERSIBLE
22-5370-50	ROUND	1/2 IN KEYED SPINDLE	1750	3500	2.8 | 3.79	2.1	0.95	4.9-1	6.16 | 156	0.7	29	REVERSIBLE
22M5270-50	FLANGE AND BASE MOUNTING	1/2 IN KEYED SPINDLE	1200	2400	4.0 | 5.42	2.1	0.95	7.1-1	6.16 | 156	0.7	29	REVERSIBLE

Air Inlet: 1/4" NPT – Side and rear
Air consumption: 29 cfm (.82 m3/min)
All tools performance rated @ 90psi (620 kPa) air pressure.
*Optional Terminations:
Replace -50 in model number with the desired termination when ordering.
-38 0"-1/4" Capacity Drill Chuck (5000 RPM or less)
-51 1/16"-3/8" Capacity Drill Chuck (5000 RPM or less)
-53 5/64"-1/2" Capacity Drill Chuck (5000 RPM or less)
-60 1/2"-20 Threaded Spindle
-01 Series 200 Collet Chuck (for milling and routing)
-62 Series "K" Collet Chuck (for milling and routing)
Standard Equipment:
Hex socket screw provided for closure of unused inlet. Flush fitting for lubrication of gears. Wrench for threaded spindle and collet chuck models. 1/4" collet included with series 200 & "K" collet chuck.
Optional Equipment:
Any series 200 and "K" collet may be substituted at no additional cost.
**Please visit clecotools.com for dimensional diagrams and power curves.

Airline Filter & Lubricator

Mounts in Hose Line.

- One ounce reservoir good for average 8-hour shift.

MODEL	DESCRIPTION	MAX PRESSURE	AIR INLET SIZE
		LB/IN² I BAR	IN
45-0201	LUBRICATOR	100 LB/IN² | 6.9 BAR	1/4
45-0301	LUBRICATOR	100 LB/IN² | 6.9 BAR	3/8

Push Pull Sleeve Valve

Available for all 1/4” npt air tools

- Air inlet 1/4” female NPT; outlet is 1/4” male NPTF

MODEL	DESCRIPTION
14-2209	PUSH PULL SLEEVE VALVE

Flexible Air Hose

•

MODEL	DESCRIPTION	FITTINGS (NPT)	DIAMETER	LENGTH
			IN	IN I MM
45-1307	AIR HOSE	1/4 X 1/8 IN	3/16	7 FT | 2134 MM
45-1408	AIR HOSE	1/4 X 1/4 IN	1/4	8 FT | 2438 MM
45-1508	AIR HOSE	1/4 X 1/4 IN	5/16	8 FT | 2438 MM
45-1610	FLEXIBLE AIR HOSE	3/8 X 3/8 IN	3/8	10 FT | 3048 MM
45-1812	AIR HOSE	1/2 X 1/2 IN	1/2	12 FT | 3658 MM
45-1825	AIR HOSE	1/2 X 1/2 IN	1/2	25 FT | 7620 MM

General: 3/16” & 1/4” hoses have braided covers, all others have neoprene covers.

21MF Series - Air Motor - Rotary Vane

Maximum Power 0.3 hp | 0.22 kw

- Maximum Power 0.3 hp | 0.22 kw
- Torque Range 0.24 - 11.3 ft. lbs. | 0.3 - 15.3 Nm
- Non-Reversible
- Side Exhaust
- Threaded or Keyed Spindle

MODEL	MOUNT	SPINDLE TYPE	RPM AT MAX HP	FREE SPEED	TORQUE STALL	GEAR RATIO	LENGTH	HORSEPOWER	AIR CONSUMPTION	CONTROL
			R/MIN	R/MIN	FT LB | NM		IN | MM	HP	SCFM	
21MFN907M	THREAD	3/8 IN THREADED SPINDLE	250	500	11.3 | 15.3	48.0-1	6.75 | 171	0.3	12	NON-REVERSIBLE
21MFN916M	THREAD	3/8 IN KEYED SPINDLE	325	650	9.30 | 12.6	36.9-1	6.75 | 171	0.3	12	NON-REVERSIBLE
21MFN902M	THREAD	3/8 IN THREADED SPINDLE	1750	3500	1.70 | 2.3	6.8-1	5.69 | 145	0.3	12	NON-REVERSIBLE
21MFN917M	THREAD	3/8 IN KEYED SPINDLE	250	500	11.3 | 15.3	48.0-1	6.75 | 171	0.3	12	NON-REVERSIBLE

21MR Series - Air Motor - Rotary Vane

Maximum Power 0.25 hp | 0.19 kw

- Maximum Power 0.25 hp | 0.19 kw
- Torque Range 1.6 - 10.0 ft. lbs. | 2.2 - 13.6 Nm
- Reversible
- Side Exhaust
- Keyed Spindle

MODEL	SPINDLE TYPE	RPM AT MAX HP	TORQUE STALL	WEIGHT		GEAR RATIO	LENGTH	HORSEPOWER	AIR CONSUMPTION	CONTROL
		R/MIN	FT LB | NM	LB	KG		IN | MM	HP	SCFM	
21MRR912M	3/8 IN KEYED SPINDLE	1500	1.6 | 2.2	2.1	0.95	6.8-1	6.5 | 165	0.25	12	REVERSIBLE
21MRR917M	3/8 IN KEYED SPINDLE	200	10.0 | 13.6	2.1	0.95	48.0-1	7.56 | 192	0.25	12	REVERSIBLE

General:
Air Inlet: 1/4" NPT
Air consumption: 12 cfm (.34 m3/min)
Offset (Side-to-Center) – 47/64"
Achieves full speed within a half revolution
All tools performance rated @ 90psi (620 kPa) air pressure.
Standard Equipment:
1015869 Muffler
**Please visit clecotools.com for dimensional diagrams and power curves.

31MF Series - Air Motor - Rotary Vane

Maximum Power 0.5 hp | 0.37 kw

- Maximum Power 0.5 hp | 0.37 kw
- Torque Range 0.5 - 23.6 ft. lbs. | 0.68 - 32 Nm
- Non-Reversible
- Side Exhaust
- Threaded or Keyed Spindle

MODEL	MOUNT	SPINDLE TYPE	RPM AT MAX HP	FREE SPEED	TORQUE STALL	WEIGHT		GEAR RATIO	LENGTH	HORSEPOWER	AIR CONSUMPTION	CONTROL
			R/MIN	R/MIN	FT LB | NM	LB	KG		IN | MM	HP	SCFM	
31MFN905M	THREAD	3/8 IN THREADED SPINDLE	550	1100	8.8 | 11.9	2.1	0.95	16.0-1	7.56 | 192	0.5	18	NON-REVERSIBLE
31MFN902M	THREAD	3/8 IN THREADED SPINDLE	1500	3000	3.5 | 4.7	2.1	0.95	6.44-1	6.18 | 157	0.5	18	NON-REVERSIBLE
31MFN912M	THREAD	3/8 IN KEYED SPINDLE	1500	3000	3.5 | 4.7	2.1	0.95	6.44-1	6.18 | 157	0.5	18	NON-REVERSIBLE
31MFN901M	THREAD	3/8 IN THREADED SPINDLE	2500	5000	2.2 | 3	2.1	0.95	4.0-1	6.18 | 157	0.5	18	NON-REVERSIBLE
31MFN900M	THREAD	3/8 IN THREADED SPINDLE	10000	20000	0.5 | 0.68	2.1	0.95	1-1	6.18 | 157	0.5	18	NON-REVERSIBLE
31MFN917M	THREAD	3/8 IN KEYED SPINDLE	225	450	23.6 | 32	2.1	0.95	43.06-1	7.56 | 192	0.5	18	NON-REVERSIBLE

General:
Air Inlet: 1/4" NPT
Air consumption: 18 cfm (.51 m3/min)
Offset (Side-to-Center) – 15/16"
Achieves full speed within a half revolution
All tools performance rated @ 90psi (620 kPa) air pressure.
Standard Equipment:
1015869 Muffler
**Please visit clecotools.com for dimensional diagrams and power curves.

31MR Series - Air Motor - Rotary Vane

Maximum Power 0.3 hp | 0.22 kw

- Maximum Power 0.3 hp | 0.22 kw
- Torque Range 2 - 21.6 ft. lbs. | 2.7 - 29.3 Nm
- Reversible
- Side Exhaust
- Keyed Spindle

MODEL	MOUNT	SPINDLE TYPE	RPM AT MAX HP	FREE SPEED	TORQUE STALL	WEIGHT		GEAR RATIO	LENGTH	HORSEPOWER	AIR CONSUMPTION	CONTROL
			R/MIN	R/MIN	FT LB | NM	LB	KG		IN | MM	HP	SCFM	
31MRR914M	THREAD	3/8 IN KEYED SPINDLE	500	1000	6.5 | 8.8	2.1	0.95	14.28-1	7.62 | 194	0.3	12	REVERSIBLE
31MRR911M	THREAD	3/8 IN KEYED SPINDLE	1750	3500	2.0 | 2.7	2.1	0.95	4.0-1	6.93 | 176	0.3	12	REVERSIBLE
31MRR917M	THREAD	3/8 IN KEYED SPINDLE	150	300	21.6 | 29.3	2.1	0.95	43.06-1	8.31 | 211	0.3	12	REVERSIBLE

General:
Air Inlet: 1/4" NPT
Air consumption: 12 cfm (.34 m3/min)
Offset (Side-to-Center) – 47/64"
Achieves full speed within a half revolution
Can be reversed instantaneously and continuously.
All tools performance rated @ 90psi (620 kPa) air pressure.
Standard Equipment:
1015748 Muffler
**Please visit clecotools.com for dimensional diagrams and power curves.

41MR Series - Air Motor - Rotary Vane

Maximum Power 0.6 hp | 0.45 kw

- Maximum Power 0.6 hp | 0.45 kw
- Torque Range 2.9 - 39.6 ft. lbs. | 3.9 - 53.7 Nm
- Reversible
- Side Exhaust
- Keyed Spindle

MODEL	MOUNT	SPINDLE TYPE	RPM AT MAX HP	FREE SPEED	TORQUE STALL	WEIGHT		GEAR RATIO	LENGTH	HORSEPOWER	AIR CONSUMPTION	CONTROL
			R/MIN	R/MIN	FT LB | NM	LB	KG		IN | MM	HP	SCFM	
41MRR914M	THREAD	1/2 IN KEYED SPINDLE	600	1200	9.1 | 12.3	2.1	0.95	12.37-1	8.92 | 227	0.6	25.1	REVERSIBLE
41MRR912M	THREAD	1/2 IN KEYED SPINDLE	1250	2500	4.4 | 6	2.1	0.95	6.0-1	8.42 | 214	0.6	25.1	REVERSIBLE
41MRR918M	THREAD	1/2 IN KEYED SPINDLE	138	275	39.6 | 53.7	2.1	0.95	54.5-1	9.92 | 252	0.6	25.1	REVERSIBLE

General:
Air Inlet: 1/4" NPT
Air consumption: 25 cfm (.71 m3/min)
Offset (Side-to-Center) – 1-7/32"
Can be reversed instantaneously and continuously.
All tools performance rated @ 90psi (620 kPa) air pressure.
Standard Equipment:
1024078 Muffler
**Please visit clecotools.com for dimensional diagrams and power curves.

61MF Series - Air Motor - Rotary Vane

Maximum Power 1.5 hp | 1.12 kw

- Maximum Power 1.5 hp | 1.12 kw
- Torque Range 6.9 - 110 ft. lbs. | 9.4 - 149.2 Nm
- Non-Reversible
- Side Exhaust
- Threaded or Keyed Spindle

MODEL	MOUNT	SPINDLE TYPE	RPM AT MAX HP	FREE SPEED	TORQUE STALL	WEIGHT		GEAR RATIO	LENGTH	HORSEPOWER	AIR CONSUMPTION	CONTROL
			R/MIN	R/MIN	FT LB I NM	LB	KG		IN I MM	HP	SCFM	
61MFN915M	THREAD	3/4 IN KEYED SPINDLE	113	225	110.0 | 149.2	2.1	0.95	66.3-1	12.28 | 312	1.5	55	NON-REVERSIBLE

General
Air Inlet: 3/8" NPT
Air consumption: 55 cfm (1.56 m3/min)
Offset (side-to-center) – 1-1/4"
Achieves full speed within a half revolution
All tools performance rated @ 90psi (620 kPa) air pressure.
Standard Equipment:
1015870 Muffler
**Please visit clecotools.com for dimensional diagrams and power curves.

61MR Series - Air Motor - Rotary Vane

Maximum Power 1.0 hp | 0.75 kw

- Maximum Power 1.0 hp | 0.75 kw
- Torque Range 5.2 - 83 ft. lbs. | 7.1 - 112.5 Nm
- Reversible
- Side Exhaust
- Keyed Spindle

MODEL	MOUNT	SPINDLE TYPE	RPM AT MAX HP	FREE SPEED	TORQUE STALL	WEIGHT		GEAR RATIO	LENGTH	HORSEPOWER	AIR CONSUMPTION	CONTROL
			R/MIN	R/MIN	FT LB I NM	LB	KG		IN I MM	HP	SCFM	
61MRR915M	THREAD	3/4 IN KEYED SPINDLE	100	200	83.0 | 112.5	2.1	0.95	66.3-1	12.59 | 320	1.0	50	REVERSIBLE

General
Air Inlet: 3/8" NPT
Air consumption: 50 cfm (1.42 m3/min)
Offset (side-to-center) – 1-1/2"
Achieves full speed within a half revolution
All tools performance rated @ 90psi (620 kPa) air pressure.
Standard Equipment:
1015869 Muffler
**Please visit clecotools.com for dimensional diagrams and power curves.

Accessories for MF & MR Motors

- Mufflers for 21, 31, 41 and 61 series rotary vane motors.

MODEL	DESCRIPTION	TYPE
1015748	ACCESSORIES FO MF & MR MOTORS	41MF
1015869	ACCESSORIES FO MF & MR MOTORS	61MR
1015870	ACCESSORIES FO MF & MR MOTORS	61MF
1024078	ACCESSORIES FO MF & MR MOTORS	41MR

Foot Mounts

- Foot mount brackets for 21, 31, 41 and 61 series rotary vane motors.

MODEL	TYPE
1024282	41MF & 41MR
1024283	41MF & 41MR
1024284	61MF & 61MR

Flange Mounts

- Flange mount brackets for 21, 31, 41 and 61 series rotary vane motors.

MODEL	TYPE
1024279	31MF & 31MR
1024280	41MF & 41MR
1024281	61MF & 61MR

Dimensional drawings are available on Clecotools.com

C3N Series - Air Motor - Rotary Vane

Maximum Power 0.65 hp | 0.48 kw

- Maximum Power 0.65 hp | 0.48 kw
- Torque Range 1.5 - 30.5 ft. lbs. | 2.0 - 42 Nm
- Non-Reversible
- Side Exhaust
- Keyed Spindle

MODEL	MOUNT	SPINDLE TYPE	RPM AT MAX HP	FREE SPEED	TORQUE STALL	WEIGHT		GEAR RATIO	LENGTH	HORSEPOWER	AIR CONSUMPTION	CONTROL
			R/MIN	R/MIN	FT LB | NM	LB	KG		IN | MM	HP	SCFM	
C3N041M	FLANGE AND BASE MOUNTING	5/8 IN KEYED SPINDLE	7500	15000	1.5 | 2	2.1	0.95	1-1	9.22 | 234	0.65	27.9	NON-REVERSIBLE
C3N055M	FLANGE AND BASE MOUNTING	5/8 IN KEYED SPINDLE	600	1200	12.5 | 17	2.1	0.95	12.56-1	10.09 | 256	0.65	27.9	NON-REVERSIBLE

*All models assume overhung load located at .94" (23.81mm) from face of motor.
General:
Air Inlet: 1/4" NPT
Air consumption: 28 cfm (.79 m3/min)
All tools performance rated @ 90psi (620 kPa) air pressure.
Standard Equipment:
Air strainer intake fitting. Foot and flange type mount.
Optional Equipment:
Lubricating Oil – Part 533485 (1 gallon)
**Please visit clecotools.com for dimensional diagrams and power curves.

C3R Series - Air Motor - Rotary Vane

Maximum Power 0.45 hp | 0.34 kw

- Maximum Power 0.45 hp | 0.34 kw
- Torque Range 4.0 - 28 ft. lbs. | 5.4 - 38 Nm
- Reversible
- Side Exhaust
- Keyed Spindle

MODEL	MOUNT	SPINDLE TYPE	RPM AT MAX HP	FREE SPEED	TORQUE STALL	WEIGHT		GEAR RATIO	LENGTH	HORSEPOWER	AIR CONSUMPTION	CONTROL
			R/MIN	R/MIN	FT LB | NM	LB	KG		IN | MM	HP	SCFM	
C3R039M	FLANGE AND BASE MOUNTING	5/8 IN KEYED SPINDLE	150	300	28.0 | 38	2.1	0.95	33-1	10.09 | 256	0.45	27.9	REVERSIBLE
C3R040M	FLANGE AND BASE MOUNTING	5/8 IN KEYED SPINDLE	200	400	20.0 | 27	2.1	0.95	23.47-1	10.09 | 256	0.45	27.9	REVERSIBLE
C3R047M	FLANGE AND BASE MOUNTING	5/8 IN KEYED SPINDLE	400	800	11.5 | 15.6	2.1	0.95	12.56-1	10.09 | 256	0.45	27.9	REVERSIBLE
C3R048M	FLANGE AND BASE MOUNTING	5/8 IN KEYED SPINDLE	1400	2800	4.0 | 5.4	2.1	0.95	3.55-1	9.22 | 234	0.45	27.9	REVERSIBLE
C3R050M	FLANGE AND BASE MOUNTING	5/8 IN KEYED SPINDLE	700	1400	6.5 | 8.8	2.1	0.95	6.6-1	9.22 | 234	0.45	27.9	REVERSIBLE

*All models assume overhung load located at .94" (23.81mm) from face of motor.
General:
Air Inlet: 1/4" NPT
Air consumption: 28 cfm (.79 m3/min)
All tools performance rated @ 90psi (620 kPa) air pressure.
Standard Equipment:
Air strainer intake fitting. Foot and flange type mount.
Optional Equipment:
Lubricating Oil – Part 533485 (1 gallon)
**Please visit clecotools.com for dimensional diagrams and power curves.

41N Series - Air Motor - Rotary Vane

Maximum Power 1.25 hp | 0.93 kw

- Maximum Power 1.25 hp | 0.93 kw
- Torque Range 13 - 68.5 ft. lbs. | 17.6 - 92.8 Nm
- Non-Reversible
- Side Exhaust
- Keyed Spindle

MODEL	MOUNT	SPINDLE TYPE	RPM AT MAX HP	FREE SPEED	TORQUE STALL	WEIGHT		GEAR RATIO	LENGTH	HORSEPOWER	AIR CONSUMPTION	CONTROL
			R/MIN	R/MIN	FT LB | NM	LB	KG		IN | MM	HP	SCFM	
41N075M	FLANGE AND BASE MOUNTING	5/8 IN KEYED SPINDLE	375	750	39.5 | 53.6	2.1	0.95	22.6-1	12 | 305	1.25	39.9	NON-REVERSIBLE

*All models assume overhung load located at .94" (23.81mm) from face of motor.
General:
Air Inlet: 3/8" NPT
Air consumption: 40 cfm (1.13 m3/min)
All tools performance rated @ 90psi (620 kPa) air pressure.
Standard Equipment:
Air strainer intake fitting. Foot and flange type mount.
Optional Equipment:
Pilot Ring – Part 520886
**Please visit clecotools.com for dimensional diagrams and power curves.

41R Series - Air Motor - Rotary Vane

Maximum Power 1.0 hp | 0.75 kw

- Maximum Power 1.0 hp | 0.75 kw
- Torque Range 12 - 63 ft. lbs. | 16.3 - 85.4 Nm
- Reversible
- Side Exhaust
- Keyed Spindle

MODEL	MOUNT	SPINDLE TYPE	RPM AT MAX HP	FREE SPEED	TORQUE STALL	WEIGHT		GEAR RATIO	LENGTH	HORSEPOWER	AIR CONSUMPTION	CONTROL
			R/MIN	R/MIN	FT LB | NM	LB	KG		IN | MM	HP	SCFM	
41R032M	FLANGE AND BASE MOUNTING	5/8 IN KEYED SPINDLE	160	320	63.0 | 85.4	2.1	0.95	39-1	12 | 305	1.0	32.8	REVERSIBLE
41R044M	FLANGE AND BASE MOUNTING	5/8 IN KEYED SPINDLE	220	440	45.5 | 61.7	2.1	0.95	28.4-1	12 | 305	1.0	32.8	REVERSIBLE
41R056M	FLANGE AND BASE MOUNTING	5/8 IN KEYED SPINDLE	255	560	36.0 | 48.8	2.1	0.95	22.6-1	12 | 305	1.0	32.8	REVERSIBLE
41R075M	FLANGE AND BASE MOUNTING	5/8 IN KEYED SPINDLE	375	750	27.0 | 36.6	2.1	0.95	16.8-1	12 | 305	1.0	32.8	REVERSIBLE
41R128M	FLANGE AND BASE MOUNTING	5/8 IN KEYED SPINDLE	640	1280	16.5 | 22.4	2.1	0.95	9.86-1	12 | 305	1.0	32.8	REVERSIBLE
41R176M	FLANGE AND BASE MOUNTING	5/8 IN KEYED SPINDLE	880	1760	12.0 | 16.3	2.1	0.95	7.2-1	12 | 305	1.0	32.8	REVERSIBLE

*All models assume overhung load located at 1.0" (25.40mm) from face of motor.
General:
Air Inlet: 3/8" NPTF
Air consumption: 33 cfm (.93 m3/min)
All tools performance rated @ 90psi (620 kPa) air pressure.
Standard Equipment:
Air strainer intake fitting. Foot and flange type mount.
Optional Equipment:
Pilot Ring – Part 520886
Lubricating Oil – Part 533485 (1 gallon)
**Please visit clecotools.com for dimensional diagrams and power curves.

60N Series - Air Motor - Rotary Vane

Maximum Power 2.3 hp | 1.72 kw

- Maximum Power 2.3 hp | 1.72 kw
- Torque Range 50 - 120 ft. lbs. | 68 - 163 Nm
- Non-Reversible
- Side Exhaust
- Keyed Spindle

MODEL	MOUNT	SPINDLE TYPE	RPM AT MAX HP	FREE SPEED	TORQUE STALL	WEIGHT		GEAR RATIO	LENGTH	HORSEPOWER	AIR CONSUMPTION	CONTROL
			R/MIN	R/MIN	FT LB I NM	LB	KG		IN I MM	HP	SCFM	
60N196M	FLANGE AND BASE MOUNTING	1 1/8 IN KEYED SPINDLE	345	690	67.0 | 91	2.1	0.95	19-1	17.03 | 433	2.3	70	NON-REVERSIBLE

*All models assume overhung load located at 2.0" (50.80mm) from face of motor.
General:
Air Inlet: 1/2" NPTF
Air consumption: 70 cfm (1.98 m3/min)
All tools performance rated @ 90psi (620 kPa) air pressure.
Standard Equipment:
Air strainer intake fitting. Foot and flange type mount.
Optional Equipment:
Lubricating Oil – Part 533485 (1 gallon)
**Please visit clecotools.com for dimensional diagrams and power curves.

60R Series - Air Motor - Rotary Vane

Maximum Power 1.9 hp | 1.42 kw

- Maximum Power 1.9 hp | 1.42 kw
- Torque Range 43 - 101 ft. lbs. | 58 - 137 Nm
- Reversible
- Side Exhaust
- Keyed Spindle

MODEL	MOUNT	SPINDLE TYPE	RPM AT MAX HP	FREE SPEED	TORQUE STALL	WEIGHT		GEAR RATIO	LENGTH	HORSEPOWER	AIR CONSUMPTION	CONTROL
			R/MIN	R/MIN	FT LB I NM	LB	KG		IN I MM	HP	SCFM	
60R201M	FLANGE AND BASE MOUNTING	1 1/8 IN KEYED SPINDLE	245	490	57.0 | 77	2.1	0.95	19-1	17.03 | 433	1.9	70	REVERSIBLE
60R204M	FLANGE AND BASE MOUNTING	1 1/8 IN KEYED SPINDLE	135	270	101.0 | 137	2.1	0.95	33.7-1	17.03 | 433	1.9	70	REVERSIBLE

*All models assume overhung load located at 2.0" (50.80mm) from face of motor.
General:
Air Inlet: 1/2" NPTF
Air consumption: 70 cfm (1.98 m3/min)
All tools performance rated @ 90psi (620 kPa) air pressure.
Standard Equipment:
Air strainer intake fitting. Foot and flange type mount.
Optional Equipment:
Lubricating Oil – Part 533485 (1 gallon)
**Please visit clecotools.com for dimensional diagrams and power curves.

MR10 Series - Air Motor - Rotary Vane

Maximum Power 1.0 hp | 0.75 kw

- Maximum Power 1.0 hp | 0.75 kw
- Torque Range 2.5 - 74 ft. lbs. | 3.4 - 100 Nm
- Reversible
- Side Exhaust
- Keyed Spindle

MODEL	MOUNT	SPINDLE TYPE	RPM AT MAX HP	FREE SPEED	TORQUE STALL	WEIGHT		GEAR RATIO	LENGTH	HORSEPOWER	AIR CONSUMPTION	CONTROL
			R/MIN	R/MIN	FT LB I NM	LB	KG		IN I MM	HP	SCFM	
MR10R097M	FOOT MOUNTING	5/8 IN KEYED SPINDLE	8500	17000	2.5 | 3.4	2.1	0.95	1-1	6.75 | 171	1.0	54	REVERSIBLE

*Non-geared models assume overhung load located at 0.5" (12.70mm) from face of motor.
Geared models assume overhung load located at 0.75" (19.05mm) from face of motor.
General:
Air Inlet: 3/8" NPTF
Air consumption: 54 cfm (1.53 m3/min)
All tools performance rated @ 90psi (620 kPa) air pressure.
Standard Equipment:
Air strainer intake fitting. Foot and flange type mount.
Optional Equipment:
Lubricating Oil – Part 533485 (1 gallon)
**Please visit clecotools.com for dimensional diagrams and power curves.

MR30 Series - Air Motor - Rotary Vane

Maximum Power 3.0 hp | 2.24 kw

- Maximum Power 3.0 hp | 2.24 kw
- Torque Range 7.2 - 209 ft. lbs. | 10 - 283 Nm
- Reversible
- Side Exhaust
- Keyed Spindle

MODEL	MOUNT	SPINDLE TYPE	RPM AT MAX HP	FREE SPEED	TORQUE STALL	WEIGHT		GEAR RATIO	LENGTH	HORSEPOWER	AIR CONSUMPTION	CONTROL
			R/MIN	R/MIN	FT LB | NM	LB	KG		IN | MM	HP	SCFM	
MR30R111M	FLANGE MOUNTING	1 1/8 IN KEYED SPINDLE	366	670	91.0 | 123	2.1	0.95	16.4-1	14.19 | 360	3.0	124	REVERSIBLE
MR30R104M	FLANGE MOUNTING	3/4 IN KEYED SPINDLE	6000	11000	7.2 | 10	2.1	0.95	1-1	8.75 | 222	3.0	124	REVERSIBLE
MR30R107M	FOOT MOUNTING	1 1/8 IN KEYED SPINDLE	177	325	209.0 | 283	2.1	0.95	23.8-1	14.19 | 360	3.0	124	REVERSIBLE
MR30R103M	FOOT MOUNTING	3/4 IN KEYED SPINDLE	6000	11000	7.2 | 10	2.1	0.95	1-1	8.75 | 222	3.0	124	REVERSIBLE
MR30R112M	FLANGE MOUNTING	1 1/8 IN KEYED SPINDLE	177	325	209.0 | 283	2.1	0.95	23.8-1	14.19 | 360	3.0	124	REVERSIBLE

*Non-geared models assume overhung load located at 0.625" (15.88mm) from face of motor.
Geared models assume overhung load located at 0.875" (22.023mm) from face of motor.
General:
Air Inlet: 3/4" NPTF
Air consumption: 124 cfm (3.51 m3/min)
All tools performance rated @ 90psi (620 kPa) air pressure.
Standard Equipment:
Foot and flange type mount.
Optional Equipment:
Lubricating Oil – Part 533485 (1 gallon)
Gear Oil – Part 535090 (1 gallon)
**Please visit clecotools.com for dimensional diagrams and power curves.

MR50 Series - Air Motor - Rotary Vane

Maximum Power 5.5 hp | 4.10 kw

- Maximum Power 5.5 hp | 4.10 kw
- Torque Range 11.9 - 356 ft. lbs. | 16 - 483 Nm
- Reversible
- Side Exhaust
- Keyed Spindle

MODEL	MOUNT	SPINDLE TYPE	RPM AT MAX HP	FREE SPEED	TORQUE STALL	WEIGHT		GEAR RATIO	LENGTH	HORSEPOWER	AIR CONSUMPTION	CONTROL
			R/MIN	R/MIN	FT LB | NM	LB	KG		IN | MM	HP	SCFM	
MR50R114M	FLANGE MOUNTING	1 IN KEYED SPINDLE	5700	10500	11.9 | 16	2.1	0.95	1-1	9.38 | 238	5.5	172	REVERSIBLE
MR50R116M	FOOT MOUNTING	1 1/8 IN KEYED SPINDLE	181	330	356.0 | 383	2.1	0.95	31.58-1	15.25 | 387	5.5	172	REVERSIBLE
MR50R115M	FOOT MOUNTING	1 1/8 IN KEYED SPINDLE	247	450	245 | 332	2.1	0.95	23.1-1	15.25 | 387	5.5	172	REVERSIBLE
MR50R118M	FLANGE MOUNTING	1 1/8 IN KEYED SPINDLE	181	330	356.0 | 383	2.1	0.95	31.58-1	15.25 | 387	5.5	172	REVERSIBLE

*Non-geared models assume overhung load located at 0.625" (15.88mm) from face of motor.
Geared models assume overhung load located at 0.875" (22.023mm) from face of motor.
General:
Air Inlet: 3/4" NPTF
Air consumption: 172 cfm (4.87 m3/min)
All tools performance rated @ 90psi (620 kPa) air pressure.
Standard Equipment:
Foot and flange type mount.
Optional Equipment:
Lubricating Oil – Part 533485 (1 gallon)
Gear Oil – Part 535090 (1 gallon)
**Please visit clecotools.com for dimensional diagrams and power curves.

MR70 Series - Air Motor - Rotary Vane

Maximum Power 7.5 hp | 5.59 kw

- Maximum Power 7.5 hp | 5.59 kw
- Torque Range 17 - 472 ft. lbs. | 23 - 640 Nm
- Reversible
- Side Exhaust
- Keyed Spindle

MODEL	MOUNT	SPINDLE TYPE	RPM AT MAX HP	FREE SPEED	TORQUE STALL	WEIGHT		GEAR RATIO	LENGTH	HORSEPOWER	AIR CONSUMPTION	CONTROL
			R/MIN	R/MIN	FT LB | NM	LB	KG		IN | MM	HP	SCFM	
MR70R123M	FLANGE MOUNTING	1 1/4 IN KEYED SPINDLE	257	465	340.0 | 461	2.1	0.95	21.8-1	16.63 | 422	7.5	212	REVERSIBLE
MR70R122M	FOOT MOUNTING	1 1/4 IN KEYED SPINDLE	169	310	472.0 | 640	2.1	0.95	32.5-1	16.63 | 422	7.5	212	REVERSIBLE
MR70R121M	FOOT MOUNTING	1 1/4 IN KEYED SPINDLE	257	465	340.0 | 461	2.1	0.95	21.8-1	16.63 | 422	7.5	212	REVERSIBLE
MR70R119M	FOOT MOUNTING	1 1/8 IN KEYED SPINDLE	5500	10200	17.0 | 23	2.1	0.95	1-1	10.63 | 270	7.5	212	REVERSIBLE
MR70R124M	FLANGE MOUNTING	1 1/4 IN KEYED SPINDLE	169	310	472.0 | 640	2.1	0.95	32.5-1	16.63 | 422	7.5	212	REVERSIBLE

*Non-geared models assume overhung load located at 0.75" (19.05mm) from face of motor.
Geared models assume overhung load located at 1" (25.40mm) from face of motor.
General:
Air Inlet: 1" NPTF
Air consumption: 212 cfm (6.00 m3/min)
All tools performance rated @ 90psi (620 kPa) air pressure.
Standard Equipment:
Foot and flange type mount.
Optional Equipment:
Exhaust Muffler – Part 524302
Lubricating Oil – Part 533485 (1 gallon)
Gear Oil – Part 535090 (1 gallon)
**Please visit clecotools.com for dimensional diagrams and power curves.

A2 Series - Air Motor - Axial Piston

Maximum Power 0.6 hp | 0.45 kw

- Maximum Power 0.6 hp | 0.45 kw
- Torque Range 2 - 107 ft. lbs. | 2.7 - 145 Nm
- Reversible
- Rear Exhaust
- Keyed Spindle

MODEL	MOUNT	SPINDLE TYPE	RPM AT MAX HP	FREE SPEED	TORQUE STALL	WEIGHT		GEAR RATIO	LENGTH	HORSEPOWER	AIR CONSUMPTION	CONTROL
			R/MIN	R/MIN	FT LB | NM	LB	KG		IN | MM	HP	SCFM	
A2R305M	FACE MOUNTING	7/8 IN KEYED SPINDLE	75	150	63.0 | 85	2.1	0.95	31.4-1	14.28 | 363	0.6	21.2	REVERSIBLE
A2R304M	FACE MOUNTING	7/8 IN KEYED SPINDLE	99	200	48.0 | 65	2.1	0.95	23.8-1	14.28 | 363	0.6	21.2	REVERSIBLE
A2R303M	FACE MOUNTING	7/8 IN KEYED SPINDLE	169	345	28.0 | 38	2.1	0.95	13.9-1	14.28 | 363	0.6	21.2	REVERSIBLE
A2R302M	FACE MOUNTING	7/8 IN KEYED SPINDLE	255	520	19.0 | 26	2.1	0.95	9.25-1	12.12 | 308	0.6	21.2	REVERSIBLE
A2R301M	FACE MOUNTING	7/8 IN KEYED SPINDLE	575	1170	8.0 | 11	2.1	0.95	4.1-1	12.12 | 308	0.6	21.2	REVERSIBLE
A2R306M	FACE MOUNTING	7/8 IN KEYED SPINDLE	44	90	107 | 145	2.1	0.95	53.6-1	14.28 | 363	0.6	21.2	REVERSIBLE

* All models assume overhung load located at 1.75" (44.45mm) from face of motor.
** These motors must be operated with sufficient load to prevent speed from exceeding maximum allowable speed shown on performance curve.
General:
Air Inlet: 3/8" NPTF
Air consumption: 21 cfm (6.00 m3/min)
All tools performance rated @ 90psi (620 kPa) air pressure.
Standard Equipment:
Foot and flange type mount.
Optional Equipment:
Exhaust Muffler – Part 524302
Lubricating Oil – Part 533485 (1 gallon)
Gear Oil – Part 535090 (1 gallon)
**Please visit clecotools.com for dimensional diagrams and power curves.

B4 Series - Air Motor - Axial Piston

Maximum Power 0.9 hp | 0.67 kw

- Maximum Power 0.9 hp | 0.67 kw
- Torque Range 4 - 232 ft. lbs. | 6.8 - 315 Nm
- Reversible
- Rear Exhaust
- Keyed Spindle

MODEL	MOUNT	SPINDLE TYPE	RPM AT MAX HP	FREE SPEED	TORQUE STALL	WEIGHT		GEAR RATIO	LENGTH	HORSEPOWER	AIR CONSUMPTION	CONTROL
			R/MIN	R/MIN	FT LB | NM	LB	KG		IN | MM	HP	SCFM	
B4R317M	FACE MOUNTING	7/8 IN KEYED SPINDLE	46	90	232.0 | 315	2.1	0.95	46.4-1	15.21 | 386	0.9	39.9	REVERSIBLE
B4R322M	FACE MOUNTING	7/8 IN KEYED SPINDLE	79	150	136.0 | 184	2.1	0.95	27.2-1	15.21 | 386	0.9	39.9	REVERSIBLE
B4R320M	FACE MOUNTING	7/8 IN KEYED SPINDLE	154	300	70.0 | 95	2.1	0.95	13.9-1	15.21 | 386	0.9	39.9	REVERSIBLE
B4R318M	FACE MOUNTING	7/8 IN KEYED SPINDLE	270	525	40.0 | 54	2.1	0.95	8-1	13.19 | 335	0.9	39.9	REVERSIBLE
B4R319M	FACE MOUNTING	7/8 IN KEYED SPINDLE	525	1020	21.0 | 28	2.1	0.95	4.1-1	13.19 | 335	0.9	39.9	REVERSIBLE
B4R321M	FACE MOUNTING	7/8 IN KEYED SPINDLE	2150	4200	5.0 | 6.8	2.1	0.95	1-1	13.19 | 335	0.9	39.9	REVERSIBLE
B4R323M	FACE MOUNTING	7/8 IN KEYED SPINDLE	90	175	119.0 | 161	2.1	0.95	23.8-1	15.21 | 386	0.9	39.9	REVERSIBLE

* All models assume overhung load located at 1.75" (44.45mm) from face of motor.
** These motors must be operated with sufficient load to prevent speed from exceeding maximum allowable speed shown on performance curve.
General:
Air Inlet: 3/8" NPTF
Air consumption: 40 cfm (1.13 m3/min)
All tools performance rated @ 90psi (620 kPa) air pressure.
Optional Equipment:
Exhaust Muffler – Part 813485
Pendent Control Kits – See page 51
Lubricating Oil – Part 533485 (1 gallon)
Motor and Gear Lube – Part A123771 (1 pound)
**Please visit clecotools.com for dimensional diagrams and power curves.

A6 Series - Air Motor - Axial Piston

Maximum Power 1.9 hp | 1.42 kw

- Maximum Power 1.9 hp | 1.42 kw
- Torque Range 11 - 370 ft. lbs. | 15 - 502 Nm
- Reversible
- Rear Exhaust
- Keyed Spindle

MODEL	MOUNT	SPINDLE TYPE	RPM AT MAX HP	FREE SPEED	TORQUE STALL	WEIGHT		GEAR RATIO	LENGTH	HORSEPOWER	AIR CONSUMPTION	CONTROL
			R/MIN	R/MIN	FT LB | NM	LB	KG		IN | MM	HP	SCFM	
A6R331M	FACE MOUNTING	1/8 IN KEYED SPINDLE	54	100	370.0 | 502	2.1	0.95	33.6-1	19.06 | 484	1.9	62	REVERSIBLE
A6R333M	FACE MOUNTING	1/8 IN KEYED SPINDLE	89	170	223.0 | 302	2.1	0.95	20.3-1	19.06 | 484	1.9	62	REVERSIBLE
A6R332M	FACE MOUNTING	1/8 IN KEYED SPINDLE	152	290	130.0 | 176	2.1	0.95	11.9-1	19.06 | 484	1.9	62	REVERSIBLE
A6R307M	FACE MOUNTING	1/8 IN KEYED SPINDLE	315	605	64.0 | 87	2.1	0.95	5.8-1	15.88 | 403	1.9	62	REVERSIBLE
A6R308M	FACE MOUNTING	1/8 IN KEYED SPINDLE	1820	3500	1.0 | 15	2.1	0.95	1-1	15.88 | 403	1.9	62	REVERSIBLE
A6R335M	FACE MOUNTING	1/8 IN KEYED SPINDLE	535	1030	37.0 | 50	2.1	0.95	3.4-1	15.88 | 403	1.9	62	REVERSIBLE

* All models assume overhung load located at 2.25" (57.15mm) from face of motor.
** These motors must be operated with sufficient load to prevent speed from exceeding maximum allowable speed shown on performance curve.
General:
Air Inlet: 3/8" NPTF
Air consumption: 62 cfm (1.76 m3/min)
All tools performance rated @ 90psi (620 kPa) air pressure.
Optional Equipment:
Exhaust Muffler – Part 813485
Pendent Control Kits – See page 51
Lubricating Oil – Part 533485 (1 gallon)
Motor and Gear Lube – Part A123771 (1 pound)
**Please visit clecotools.com for dimensional diagrams and power curves.

A8 Series - Air Motor - Axial Piston

Maximum Power 2.7 hp | 2.01 kw

- Maximum Power 2.7 hp | 2.01 kw
- Torque Range 19 - 638 ft. lbs. | 26 - 865 Nm
- Reversible
- Rear Exhaust
- Keyed Spindle

MODEL	MOUNT	SPINDLE TYPE	RPM AT MAX HP	FREE SPEED	TORQUE STALL	WEIGHT		GEAR RATIO	LENGTH	HORSEPOWER	AIR CONSUMPTION	CONTROL
			R/MIN	R/MIN	FT LB | NM	LB	KG		IN | MM	HP	SCFM	
A8R336M	FACE MOUNTING	3/8 IN KEYED SPINDLE	38	75	638.0 | 865	2.1	0.95	33.6-1	20.63 | 524	2.7	112	REVERSIBLE
A8R337M	FACE MOUNTING	3/8 IN KEYED SPINDLE	109	215	226.0 | 306	2.1	0.95	11.9-1	20.63 | 524	2.7	112	REVERSIBLE
A8R311M	FACE MOUNTING	1/8 IN KEYED SPINDLE	225	450	110.0 | 149	2.1	0.95	5.8-1	17.5 | 445	2.7	112	REVERSIBLE
A8R310M	FACE MOUNTING	1/8 IN KEYED SPINDLE	375	765	64.0 | 87	2.1	0.95	3.4-1	17.5 | 445	2.7	112	REVERSIBLE
A8R309M	FACE MOUNTING	1/8 IN KEYED SPINDLE	1300	2600	19.0 | 26	2.1	0.95	1-1	17.5 | 445	2.7	112	REVERSIBLE
A8R338M	FACE MOUNTING	3/8 IN KEYED SPINDLE	65	125	385.0 | 522	2.1	0.95	20.3-1	20.63 | 524	2.7	112	REVERSIBLE

* All models assume overhung load located at 2.25" (57.15mm) from face of motor.
** These motors must be operated with sufficient load to prevent speed from exceeding maximum allowable speed shown on performance curve.
General:
Air Inlet: 1/2" NPTF
Air consumption: 83 cfm (3.18 m3/min)
All tools performance rated @ 90psi (620 kPa) air pressure.
Optional Equipment:
Exhaust Muffler – Part A19509
Pendent Control Kits – See page 51
Lubricating Oil – Part 533485 (1 gallon)
Motor and Gear Lube – Part A123771 (1 pound)
**Please visit clecotools.com for dimensional diagrams and power curves.

MA2 Series - Air Motor - Radial Piston

Maximum Power 1.5 hp | 1.12 kw

- Maximum Power 1.5 hp | 1.12 kw
- Torque Range 8.6 - 262 ft. lbs. | 12 - 355 Nm
- Threaded Spindle

MODEL	MOUNT	SPINDLE TYPE	RPM AT MAX HP	FREE SPEED	TORQUE STALL	WEIGHT		GEAR RATIO	LENGTH	HORSEPOWER	AIR CONSUMPTION	CONTROL
			R/MIN	R/MIN	FT LB I NM	LB	KG		IN I MM	HP	SCFM	
MA2R353M	FOOT MOUNTING	5/8 IN THREADED SPINDLE	60	120	262.0 | 355	2.1	0.95	30.4-1	14.6 | 371	1.5	58	REVERSIBLE VALVING
MA2W403M	FOOT MOUNTING	5/8 IN THREADED SPINDLE	60	120	262.0 | 355	2.1	0.95	30.4-1	14.6 | 371	1.5	58	NO VALVING

*All models assume overhung load located at 0.625" (15.88mm) from face of motor.
**These motors must be operated with sufficient load to prevent speed from exceeding maximum allowable speed shown on performance curve.
General:
Air Inlet: 1/2" NPTF
All tools performance rated @ 90psi (620 kPa) air pressure.
Optional Equipment:
Lubricating Oil – Part 533485 (1 gallon)
Gear Oil – Part 535090 (1 gallon)
**Please visit clecotools.com for dimensional diagrams and power curves.

MA3 Series -Air Motor - Radial Piston

Maximum Power 3.0 hp | 2.24 kw

- Maximum Power 3.0 hp | 2.24 kw
- Torque Range 24 - 588 ft. lbs. | 33 - 797 Nm
- Threaded Spindle

MODEL	MOUNT	SPINDLE TYPE	RPM AT MAX HP	FREE SPEED	TORQUE STALL	WEIGHT		GEAR RATIO	LENGTH	HORSEPOWER	AIR CONSUMPTION	CONTROL
			R/MIN	R/MIN	FT LB | NM	LB	KG		IN | MM	HP	SCFM	
MA3R361M	FOOT MOUNTING	5/8 IN THREADED SPINDLE	48	100	588.0 | 797	2.1	0.95	24.6-1	16.56 | 421	3.0	95	REVERSIBLE VALVING
MA3W407M	FOOT MOUNTING	5/8 IN THREADED SPINDLE	48	100	588.0 | 797	2.1	0.95	24.6-1	16.56 | 421	3.0	95	NO VALVING
MA3S370M	FOOT MOUNTING	5/8 IN THREADED SPINDLE	104	200	299.0 | 405	2.1	0.95	12.5-1	16.56 | 421	3.0	88	SINGLE DIRECTION VALVING
MA3W406M	FOOT MOUNTING	5/8 IN THREADED SPINDLE	1190	2600	24.0 | 33	2.1	0.95	1-1	13.76 | 350	3.0	80	NO VALVING
MA3S358M	FOOT MOUNTING	5/8 IN THREADED SPINDLE	1300	2600	24.0 | 33	2.1	0.95	1-1	13.76 | 350	3.0	90	SINGLE DIRECTION VALVING
MA3W409M	FOOT MOUNTING	5/8 IN THREADED SPINDLE	183	400	155.0 | 210	2.1	0.95	6.5-1	16.56 | 421	3.0	87	NO VALVING

* Non-geared models assume overhung load located at 0.625" (15.88mm) from face of motor.
Geared models assume overhung load located at 1" (25.40mm) from face of motor.
**These motors must be operated with sufficient load to prevent speed from exceeding maximum allowable speed shown on performance curve.
General:
Air Inlet: 3/4" NPTF
All tools performance rated @ 90psi (620 kPa) air pressure.
Optional Equipment:
Lubricating Oil – Part 533485 (1 gallon)
Gear Oil – Part 535090 (1 gallon)
**Please visit clecotools.com for dimensional diagrams and power curves.

MB Series - Air Motor - Radial Piston

Maximum Power 5.5 hp | 4.10 kw

- Maximum Power 5.5 hp | 4.10 kw
- Torque Range 34 - 700 ft. lbs. | 46 - 949 Nm
- Threaded Spindle

MODEL	MOUNT	SPINDLE TYPE	RPM AT MAX HP	FREE SPEED	TORQUE STALL	WEIGHT		GEAR RATIO	LENGTH	HORSEPOWER	AIR CONSUMPTION	CONTROL
			R/MIN	R/MIN	FT LB | NM	LB	KG		IN | MM	HP	SCFM	
MBR377M	FOOT MOUNTING	3/4 IN THREADED SPINDLE	74	150	700.0 | 949	2.1	0.95	20.4-1	18.12 | 460	5.5	154	REVERSIBLE VALVING
MBW411M	FOOT MOUNTING	3/4 IN THREADED SPINDLE	74	150	700.0 | 949	2.1	0.95	20.4-1	18.12 | 460	5.5	154	NO VALVING
MBS376M	FOOT MOUNTING	3/4 IN THREADED SPINDLE	75	150	700.0 | 949	2.1	0.95	20.4-1	18.12 | 460	5.5	167	SINGLE DIRECTION VALVING
MBW412M	FOOT MOUNTING	3/4 IN THREADED SPINDLE	133	270	388.0 | 526	2.1	0.95	11.3-1	18.12 | 460	5.5	148	NO VALVING
MBR381M	FOOT MOUNTING	3/4 IN THREADED SPINDLE	268	540	192.0 | 260	2.1	0.95	5.6-1	18.12 | 460	5.5	140	REVERSIBLE VALVING
MBS380M	FOOT MOUNTING	3/4 IN THREADED SPINDLE	270	540	192.0 | 260	2.1	0.95	5.6-1	18.12 | 460	5.5	144	SINGLE DIRECTION VALVING
MBW410M	FOOT MOUNTING	3/4 IN THREADED SPINDLE	1500	3000	34.0 | 46	2.1	0.95	1-1	17.5 | 445	5.5	152	NO VALVING
MBW413M	FOOT MOUNTING	3/4 IN THREADED SPINDLE	268	540	192.0 | 260	2.1	0.95	6.5-1	18.12 | 460	5.5	140	NO VALVING

* All models assume overhung load located at 1" (25.40mm) from face of motor.
**These motors must be operated with sufficient load to prevent speed from exceeding maximum allowable speed shown on performance curve.
General:
Air Inlet: 1" NPTF
All tools performance rated @ 90psi (620 kPa) air pressure.
Optional Equipment:
Lubricating Oil – Part 533485 (1 gallon)
Gear Oil – Part 535090 (1 gallon)
**Please visit clecotools.com for dimensional diagrams and power curves.

MK Series - Air Motor - Radial Piston

Maximum Power 11 hp | 8.20 kw

- Maximum Power 11 hp | 8.20 kw
- Torque Range 117 - 1654 ft. lbs. | 159 - 2243 Nm
- Threaded Spindle

MODEL	MOUNT	SPINDLE TYPE	RPM AT MAX HP	FREE SPEED	TORQUE STALL	WEIGHT		GEAR RATIO	LENGTH	HORSEPOWER	AIR CONSUMPTION	CONTROL
			R/MIN	R/MIN	FT LB | NM	LB	KG		IN | MM	HP	SCFM	
MKW419M	FOOT MOUNTING	1 1/4 IN THREADED SPINDLE	67	135	1654.0 | 2243	2.1	0.95	14.2-1	20.88 | 530	11	288	NO VALVING
MKS392M	FOOT MOUNTING	1 1/4 IN THREADED SPINDLE	69	135	1654.0 | 2243	2.1	0.95	14.2-1	20.88 | 530	11	293	SINGLE DIRECTION VALVING
MKR395M	FOOT MOUNTING	1 1/4 IN THREADED SPINDLE	183	375	606.0 | 822	2.1	0.95	5.2-1	20.88 | 530	11	299	REVERSIBLE VALVING
MKW418M	FOOT MOUNTING	1 IN THREADED SPINDLE	975	1900	117.0 | 159	2.1	0.95	1-1	20.42 | 519	11	311	NO VALVING
MKW420M	FOOT MOUNTING	1 1/4 IN THREADED SPINDLE	183	375	606.0 | 822	2.1	0.95	5.2-1	20.88 | 530	11	299	NO VALVING

* All models assume overhung load located at 1" (25.40mm) from face of motor.
**These motors must be operated with sufficient load to prevent speed from exceeding maximum allowable speed shown on performance curve.
General:
Air Inlet: 1-1/4" NPTF
All tools performance rated @ 90psi (620 kPa) air pressure.
Optional Equipment:
Lubricating Oil – Part 533485 (1 gallon)
Gear Oil – Part 535090 (1 gallon)
**Please visit clecotools.com for dimensional diagrams and power curves.

MM Series - Air Motor - Radial Piston

Maximum Power 15 hp | 11.19 kw

- Maximum Power 15 hp | 11.19 kw
- Torque Range 138 - 1952 ft. lbs. | 187 - 2647 Nm
- Threaded Spindle

MODEL	MOUNT	SPINDLE TYPE	RPM AT MAX HP	FREE SPEED	TORQUE STALL	WEIGHT		GEAR RATIO	LENGTH	HORSEPOWER	AIR CONSUMPTION	CONTROL
			R/MIN	R/MIN	FT LB | NM	LB	KG		IN | MM	HP	SCFM	
MMW422M	FOOT MOUNTING	1 1/4 IN THREADED SPINDLE	71	150	1952.0 | 2647	2.1	0.95	14.2-1	20.88 | 530	15	345	NO VALVING
MMS400M	FOOT MOUNTING	1 1/4 IN THREADED SPINDLE	206	400	715.0 | 970	2.1	0.95	5.2-1	20.88 | 530	15	336	SINGLE DIRECTION VALVING

* All models assume overhung load located at 1" (25.40mm) from face of motor.
**These motors must be operated with sufficient load to prevent speed from exceeding maximum allowable speed shown on performance curve.
General:
Air Inlet: 1-1/4" NPTF
All tools performance rated @ 90psi (620 kPa) air pressure.
Optional Equipment:
Lubricating Oil – Part 533485 (1 gallon)
Gear Oil – Part 535090 (1 gallon)
**Please visit clecotools.com for dimensional diagrams and power curves.

MODEL	MOUNT	SPINDLE TYPE	RPM AT MAX HP	FREE SPEED	TORQUE STALL	WEIGHT		GEAR RATIO	LENGTH	HORSEPOWER	AIR CONSUMPTION	CONTROL
			R/MIN	R/MIN	FT LB | NM	LB	KG		IN | MM	HP	SCFM	
MMW421M	FOOT MOUNTING	1 1/4 IN THREADED SPINDLE	1010	2100	138.0 | 187	2.1	0.95	1-1	20.42 | 519	15	352	NO VALVING
MMS396M	FOOT MOUNTING	1 1/4 IN THREADED SPINDLE	1070	2100	138.0 | 187	2.1	0.95	1-1	20.42 | 519	15	348	SINGLE DIRECTION VALVING
MMW423M	FOOT MOUNTING	1 1/4 IN THREADED SPINDLE	194	400	715.0 | 970	2.1	0.95	5.2-1	20.88 | 530	15	332	NO VALVING

* All models assume overhung load located at 1" (25.40mm) from face of motor.
**These motors must be operated with sufficient load to prevent speed from exceeding maximum allowable speed shown on performance curve.
General:
Air Inlet: 1-1/4" NPTF
All tools performance rated @ 90psi (620 kPa) air pressure.
Optional Equipment:
Lubricating Oil – Part 533485 (1 gallon)
Gear Oil – Part 535090 (1 gallon)
**Please visit clecotools.com for dimensional diagrams and power curves.

ME Series - Air Motor - Radial Piston

Maximum Power 5.5 hp | 4.10 kw

- Maximum Power 5.5 hp | 4.10 kw
- Torque Range 34 - 700 ft. lbs. | 46 - 949 Nm
- Threaded Spindle

MODEL	MOUNT	SPINDLE TYPE	RPM AT MAX HP	FREE SPEED	TORQUE STALL	WEIGHT		GEAR RATIO	LENGTH	HORSEPOWER	AIR CONSUMPTION	CONTROL
			R/MIN	R/MIN	FT LB | NM	LB	KG		IN | MM	HP	SCFM	
MER385M	FOOT MOUNTING	1 1/4 IN THREADED SPINDLE	60	120	985.0 | 1336	2.1	0.95	20.4-1	18.12 | 460	6.5	167	REVERSIBLE VALVING
MEW415M	FOOT MOUNTING	1 1/4 IN THREADED SPINDLE	60	120	985.0 | 1336	2.1	0.95	20.4-1	18.12 | 460	6.5	167	NO VALVING
MES384M	FOOT MOUNTING	1 1/4 IN THREADED SPINDLE	61	120	985.0 | 1336	2.1	0.95	20.4-1	18.12 | 460	6.5	168	SINGLE DIRECTION VALVING
MEW417M	FOOT MOUNTING	1 1/4 IN THREADED SPINDLE	219	440	270.0 | 366	2.1	0.95	6.5-1	18.12 | 460	6.5	152	NO VALVING

* All models assume overhung load located at 1" (25.40mm) from face of motor.
**These motors must be operated with sufficient load to prevent speed from exceeding maximum allowable speed shown on performance curve.
General:
Air Inlet: 1" NPTF
All tools performance rated @ 90psi (620 kPa) air pressure.
Optional Equipment:
Lubricating Oil – Part 533485 (1 gallon)
Gear Oil – Part 535090 (1 gallon)
**Please visit clecotools.com for dimensional diagrams and power curves.

BL Series - Balancers 1.0 - 4.0 lbs

- External tension adjustment
- 360° Swivel
- Retracting In-Line Cable

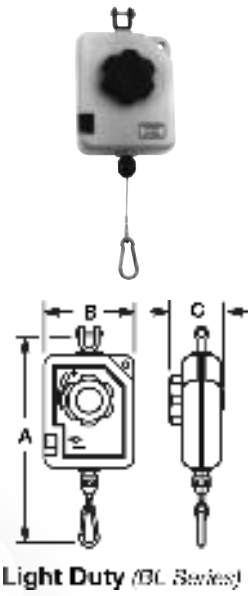

Light Duty (BL Series)

MODEL	CABLE LENGTH	CAPACITY	DIMENSION A	DIMENSION B	DIMENSION C	WEIGHT	
		LBS	IN	IN	IN	LB	KG
BL-2A	5.2 FT 1.6 M	2.0-10	10.4	4.0	2.2	1.1	0.5
BL-4A	5.2 FT 1.6 M	4.0-20	10.4	4.0	2.2	1.1	0.5

BL Series - Balancers 4.0 - 8.0 lbs

- External tension adjustment
- 360° Swivel
- Retracting In-Line Cable

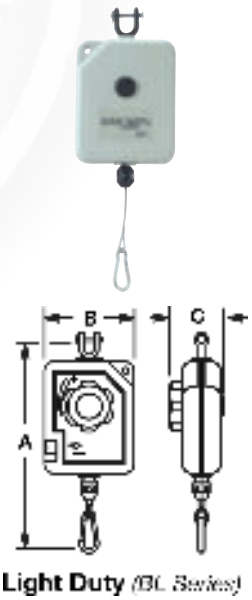

Light Duty (BL Series)

MODEL	CABLE LENGTH	CAPACITY	DIMENSION A	DIMENSION B	DIMENSION C	WEIGHT	
		LBS	IN	IN	IN	LB	KG
BL-6A	6.7 FT 2.0 M	6.0-4.0	12.9	5.5	3.1	3.3	1.5
BL-8A	6.7 FT 2.0 M	8.0-6.0	12.9	5.5	3.1	3.3	1.5
BLL-8A	6.7 FT 2.0 M	8.0-6.0	12.9	5.5	3.1	3.3	1.5

PL Series - Balancers 1.0 - 12.0 lbs

- External tension Adjustment
- 360° Swivel
- Retracting In-Line Cable

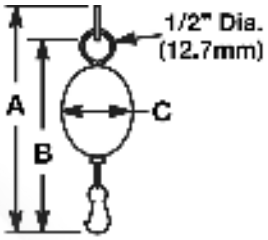

Light Duty *(PL Series)*

MODEL	CABLE LENGTH	CAPACITY	DIMENSION A	DIMENSION B	DIMENSION C
		LBS	IN	IN	IN
PL-12A	4.6 FT 1.4 M	12.0-1.0	6.8	5.1	2.3

Balance Arms - Air Cylinder - Parallel

- Ball bearing contruction
- Support tools weighing up to 10 lbs.
- Post, wall, or adjustable height post mounting
- Parallel arms

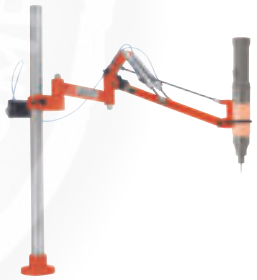

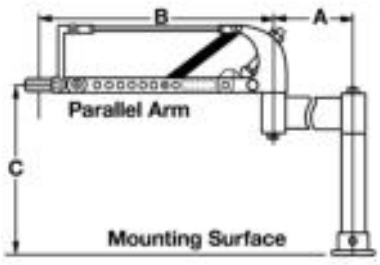

Series
- **CS** – Air cylinder, single arm
- **S** – Spring, single arm
- **CP** – Air cylinder, parallel arm
- **P** – Spring, parallel arm

Tool Type
BA – Balance Arm

Arm Extension
12" 24"
18" 30"
(12" unless specified)

Mount
- **-** – Post
- **AH** – Adjustable Height
- **WM** – Wall Mount

Adjustable Arm Extension
12" 24"
18" 30"

MODEL	CODE NO.	DIMENSION A	DIMENSION B	DIMENSION C	DIMENSION D
		IN	IN	IN	IN
CPBA-12-AH	520178	12	12		30
CPBA-18	520170	12	18	18	
CPBA-18-AH	520172	12	18		30

Tool weight capacity: 10 lbs. (4.6 kg) Air Cylinder models, 5 lbs. (2.3 kg) Spring models. Torque capacity: 10 ft. lbs. (13.5 Nm) Standard Equipment: Operating Instructions and Service Manual. Regulator for Air Cylinders. Threaded Nipples for CSBA Models 1/4 NPT Hex Nipple: 204032 1/4 NPT x 1/8 NPT Hex Reducer nipple: 204137

Balance Arms - Air Cylinder - Single

- Ball bearing construction
- Supports tools weighing up to 10 lbs.
- Post, wall, or adjustable height post mounting
- Single arm

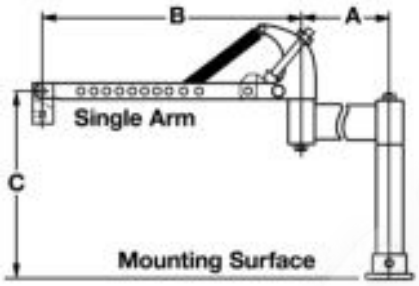

Series
CS – Air cylinder, single arm
S – Spring, single arm
CP – Air cylinder, parallel arm
P – Spring, parallel arm

Tool Type
BA – Balance Arm

Arm Extension
12" 24"
18" 30"
(12" unless specified)

Mount
- – Post
AH – Adjustable Height
WM – Wall Mount

Adjustable Arm Extension
12" 24"
18" 30"

MODEL	CODE NO.	DIMENSION A	DIMENSION B	DIMENSION C
		IN	IN	IN
CSBA18	520160	12	18	18
CSBA-18-AH	520162	12	18	

Tool weight capacity: 10 lbs. (4.6 kg) Air Cylinder models, 5 lbs. (2.3 kg) Spring models. Torque capacity: 10 ft. lbs. (13.5 Nm) Standard Equipment: Operating Instructions and Service Manual. Regulator for Air Cylinders. Threaded Nipples for CSBA Models 1/4 NPT Hex Nipple: 204032 1/4 NPT x 1/8 NPT Hex Reducer nipple: 204137

Balance Arms - Spring - Parallel

- Ball bearing construction
- Supports tools weighing up to 5 lbs.
- Post, wall, or adjustable height post mounting
- Parallel arm

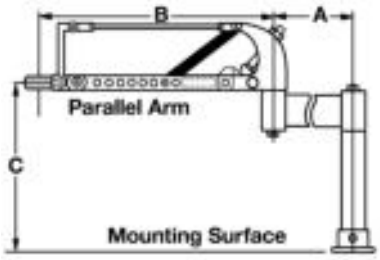

Series
CS – Air cylinder, single arm
S – Spring, single arm
CP – Air cylinder, parallel arm
P – Spring, parallel arm

Tool Type
BA – Balance Arm

Arm Extension
12" 24"
18" 30"
(12" unless specified)

Mount
- – Post
AH – Adjustable Height
WM – Wall Mount

Adjustable Arm Extension
12" 24"
18" 30"

MODEL	CODE NO.	DIMENSION A	DIMENSION B	DIMENSION C	DIMENSION D
		IN	IN	IN	IN
PBA-12	520007	12	12	18	
PBA-12-AH	520009	12	12		30
PBA-18	520010	12	18	18	
PBA-18-18-AH	520036	12	18		30
PBA-18-AH	520012	12	18		30
PBA-24	520045	12	24	18	
PBA-24-AH	520047	12	24		30
PBA-30-AH	520050	12	30		30

Tool weight capacity: 10 lbs. (4.6 kg) Air Cylinder models, 5 lbs. (2.3 kg) Spring models. Torque capacity: 10 ft. lbs. (13.5 Nm) Standard Equipment: Operating Instructions and Service Manual. Regulator for Air Cylinders. Threaded Nipples for CSBA Models 1/4 NPT Hex Nipple: 204032 1/4 NPT x 1/8 NPT Hex Reducer nipple: 204137

Balance Arms - Spring - Single

- Ball bearing construction
- Supports tools weighing up to 5 lbs.
- Post, wall, or adjustable height post mounting
- Single arm

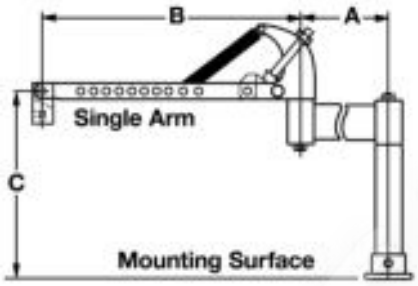

Series
CS – Air cylinder, single arm
S – Spring, single arm
CP – Air cylinder, parallel arm
P – Spring, parallel arm

Tool Type
BA – Balance Arm

Arm Extension
12" 24"
18" 30"
(12" unless specified)

Mount
- – Post
AH – Adjustable Height
WM – Wall Mount

Adjustable Arm Extension
12" 24"
18" 30"

MODEL	CODE NO.	DIMENSION A	DIMENSION B	DIMENSION C	DIMENSION D
		IN	IN	IN	IN
SBA-12	520001	12	12	18	
SBA-12-AH	520003	12	12		30
SBA-18	520004	12	18	18	
SBA-18-AH	520006	12	18		30
SBA-24-AH	520110	12	24		30

Tool weight capacity: 10 lbs. (4.6 kg) Air Cylinder models, 5 lbs. (2.3 kg) Spring models. Torque capacity: 10 ft. lbs. (13.5 Nm) Standard Equipment: Operating Instructions and Service Manual. Regulator for Air Cylinders. Threaded Nipples for CSBA Models 1/4 NPT Hex Nipple: 204032 1/4 NPT x 1/8 NPT Hex Reducer nipple: 204137

Cleco®
Production Tools

Designed for operators. Built for production

Use top-quality, precision components and motor assemblies to deliver

Manufactured from the finest materials available, Cleco tools deliver efficiency and precision. When it comes to fine finishing applications such as die grinding and de-burring, no tools are better suited for the job than Cleco grinders. Our reputation for durability, dependability and versatility is among the highest for fine finishing applications. Designed for the toughest work environments, Cleco material removal tools are built for you industry's most demanding projects.

Designed for operator

Cleco grinders are designed with the operator in mind: small, lightweight and comfortable to use, without sacrificing durability. Plus, they incorporate elastomer coatings, and perfectly balanced moving parts to keep vibration to a minimum. This optimal combination of tool characteristics allows the operator to focus on doing the best job possible, in the least amount of time.

With you can rely on a single tool for a range of industrial applications.

We design versatile tools with interchangeable parts to make our products more affordable, easier to repair, and faster to use. Cleco's Dotco sanders, buffers and polishers are available in a variety of styles and power ratings to provide flexibility in choosing the best tool for the job. Disc sanding and polishing, wire brushes, buffing wheels, abrasive sheets, woven or non-woven belts. No matter the application, we have a quality tool solution.

for high-volume, high-repetition tasks.

Cleco's Dotco drills have long been the industry workhorse for daily high-volume, high-precision use in applications ranging from appliances to aerospace manufacturing.

Be it aluminum, steel, titanium, composite, or wood, many industries require hand-drilled holes, and Cleco's Dotco tools offer some of the industry's most durable and reliable hand-held drills, available in pistol, angle and in-line configurations.

10-90 Series - Precision Grinder - Turbine - Cleco Dotco

100,000 RPM 0.06 hp (0.044 kW)

- Requires no air line lubrication - High precision ball bearings for long life expectancy
- Two-stage turbine motor with roll throttle
- Achieves a superb finish with its high speed and precision spindle
- Light weight and durable aluminum housing
- Low vibration and quiet operation minimizes operator fatigue

MODEL	COLLET SIZE	EXHAUST	FREE SPEED R/MIN	ABRASIVE CAPACITY GRINDER	TYPE HOUSING	WEIGHT LB	LENGTH IN	AIR INLET SIZE IN
10R9000-03	3 MM	FRONT	100000	3/16" CARBIDE BURR, 3/16" DIAMOND PIN	ALUMINUM	0.441	5.4	1/8
10R9000-08	1/8 IN	FRONT	100000	3/16" CARBIDE BURR, 3/16" DIAMOND PIN	ALUMINUM	0.441	5.4	1/8

CAUTION: Use dry air at 90 psi maximum: Do not lubricate turbine grinders. Lubrication will be detrimental to the operation and life of turbine tools.
Do not attach a quick-disconnect fitting directly to the tool.
Standard Equipment: Applicable collet, collet wrenches, 7 ft./2.1 m air supply hose, replaceable cartridge hose filter.

10-95 Series - Precision Grinder - Turbine - Cleco Dotco

80,000 RPM 0.1 hp (0.074 kW)

- Requires no air line lubrication - High precision ball bearings for long life expectancy
- Maximizes productivity with two-stage turbine motor
- Achieves a superb finish with its high speed and precision spindle
- Light weight and durable aluminum housing
- Low vibration and quiet operation minimizes operator fatigue

MODEL	COLLET SIZE	EXHAUST	FREE SPEED R/MIN	ABRASIVE CAPACITY GRINDER	TYPE HOUSING	WEIGHT LB	LENGTH IN	AIR INLET SIZE IN
10L9500-36	1/8 IN	FRONT	80000	1/4" CARBIDE BURR, 3/16" DIAMOND PIN	ALUMINUM	1.98	5.8	1/4
10N9500-36*	1/8 IN	FRONT	80000	1/4" CARBIDE BURR, 3/16" DIAMOND PIN	ALUMINUM	1.98	5.8	1/4
10N9500-36M3*	3 MM	FRONT	80000	1/4" CARBIDE BURR, 3/16" DIAMOND PIN	ALUMINUM	1.98	5.8	1/4

CAUTION: Use dry air at 90 psi maximum: Do not lubricate turbine grinders. Lubrication will be detrimental to the operation and life of turbine tools. Do not attach a quick-disconnect fitting directly to the tool.
Standard Equipment: Applicable collet, collet wrenches, 8 ft./2.4 m air supply hose, built-in air filter, speed regulator
* Tool will start with applied air, intended for fixtured applications

12R91 Series - Precision Grinder - Governed - Turbine

65,000 RPM 0.1 hp (0.074 kW)

- Requires no air line lubrication - High precision ball bearings for long life expectancy
- Two-stage turbine motor with roll throttle
- Achieves a superb finish with its high speed and precision spindle
- Light weight and durable composite housing
- Low vibration and quiet operation minimizes operator fatigue

MODEL	COLLET SIZE	EXHAUST	FREE SPEED R/MIN	ABRASIVE CAPACITY GRINDER	TYPE HOUSING	OVERHOSE	WEIGHT LB	LENGTH IN	AIR INLET SIZE IN
12R9180-03	3 MM	REAR	65000	1/8" CARBIDE BURR, 1/8" DIAMOND PIN	COMPOSITE	2 FT | 0.6 M	0.441	5.8	1/8
12R9180-08	1/8 IN	REAR	65000	1/8" CARBIDE BURR, 1/8" DIAMOND PIN	COMPOSITE	2 FT | 0.6 M	0.441	5.8	1/8
12R9180-43	3 MM	REAR	65000	1/8" CARBIDE BURR, 1/8" DIAMOND PIN	COMPOSITE	4 FT | 1.2 M	0.441	5.8	1/8
12R9180-48	1/8 IN	REAR	65000	1/8" CARBIDE BURR, 1/8" DIAMOND PIN	COMPOSITE	4 FT | 1.2 M	0.441	5.8	1/8

CAUTION: Use dry air at 90 psi maximum: Do not lubricate turbine grinders. Lubrication will be detrimental to the operation and life of turbine tools.
Do not attach a quick-disconnect fitting directly to the tool.
Standard Equipment: Applicable collet, collet wrenches, collet guard, 5 ft./1.5m air supply hose

12-03 Series - Precision Grinder - Gearless - Right Angle - Cleco Dotco

80,000 RPM 0.1 hp (0.074 kW)

- Industrial bearing provides long life expectancy
- Designed for precision deburring and metal removal
- Compact and light weight composite housing
- Roll throttle equipped
- Includes over-hose

MODEL	COLLET SIZE	EXHAUST	FREE SPEED R/MIN	ABRASIVE CAPACITY GRINDER	TYPE HOUSING	OVERHOSE	WEIGHT LB	LENGTH IN	AIR INLET SIZE IN
12R0380-13	3 MM	REAR	80000	1/4" CARBIDE BURR, 1/4" DIAMOND PIN	COMPOSITE	1 FT | 0.3 M	0.3	5.5	1/8
12R0380-18	1/8 IN	REAR	80000	1/4" CARBIDE BURR, 1/4" DIAMOND PIN	COMPOSITE	1 FT | 0.3 M	0.220	5.5	1/8
12R0380-43	3 MM	REAR	80000	1/4" CARBIDE BURR, 1/4" DIAMOND PIN	COMPOSITE	4 FT | 1.2 M	0.220	5.5	1/8

Do not attach a quick-disconnect fitting directly to the tool.
Standard Equipment: Applicable collet, collet wrenches, collet guard, 5 ft/1.5 m air supply hose, 1 ft./0.3 m overhose

10-04 Series - Precision Grinder - Inline - Cleco Dotco

60,000 RPM 0.1 hp (0.074 kW)

- Industrial bearing provides long life expectancy
- Designed for precision deburring and metal removal
- Compact and light aluminum weight housing
- Roll throttle equipped

MODEL	COLLET SIZE	EXHAUST	FREE SPEED R/MIN	OVERHOSE	ABRASIVE CAPACITY GRINDER	WEIGHT LB	LENGTH IN	AIR INLET SIZE IN	COLLET GUARD
10R0400-13	3 MM	REAR	60000	1 FT | 0.3 M	1/4" CARBIDE BURR, 1/4" DIAMOND PIN	0.220	5.8	1/8	WITHOUT
10R0400-18	1/8 IN	REAR	60000	1 FT | 0.3 M	1/4" CARBIDE BURR, 1/4" DIAMOND PIN	0.220	5.8	1/8	WITHOUT
10R0401-13	3 MM	REAR	60000	1 FT | 0.3 M	1/4" CARBIDE BURR, 1/4" DIAMOND PIN	0.220	5.8	1/8	WITH
10R0401-16	3/32 IN	REAR	60000	1 FT | 0.3 M	1/4" CARBIDE BURR, 1/4" DIAMOND PIN	0.220	5.8	1/8	WITH
10R0401-18	1/8 IN	REAR	60000	1 FT | 0.3 M	1/4" CARBIDE BURR, 1/4" DIAMOND PIN	0.220	5.8	1/8	WITH
10R0401-43	3 MM	REAR	60000	4 FT | 1.2 M	1/4" CARBIDE BURR, 1/4" DIAMOND PIN	0.220	5.8	1/8	WITH
10R0412-18	1/8 IN	REAR	60000	1 FT | 0.3 M	1/4" CARBIDE BURR, 1/4" DIAMOND PIN	0.220	6.2	1/8	WRENCHLESS CHUCK
10R0414-43	3 MM	REAR	60000	4 FT | 1.2 M	1/4" CARBIDE BURR, 1/4" DIAMOND PIN	0.220	5.8	1/8	WITH

Do not attach a quick-disconnect fitting directly to the tool.
Standard Equipment: Applicable collet, collet wrenches, collet guard, 5 ft/1.5 m air supply hose, 1 ft./0.3 m overhose

12-04 Series - Precision Grinder - Inline - Cleco Dotco

60,000 RPM 0.1 hp (0.074 kW)

- Industrial bearing provides long life expectancy
- Designed for precision deburring and metal removal
- Compact and light weight composite housing
- Roll throttle equipped

MODEL	COLLET SIZE	EXHAUST	FREE SPEED R/MIN	OVERHOSE	ABRASIVE CAPACITY GRINDER	WEIGHT LB	LENGTH IN	AIR INLET SIZE IN	COLLET GUARD
12R0400-13	3 MM	REAR	60000	1 FT | 0.3 M	1/4" CARBIDE BURR, 1/4" DIAMOND PIN	0.220	5.8	1/8	SHORT
12R0400-18	1/8 IN	REAR	60000	1 FT | 0.3 M	1/4" CARBIDE BURR, 1/4" DIAMOND PIN	0.220	5.8	1/8	SHORT
12R0400-43	3 MM	REAR	60000	4 FT | 1.2 M	1/4" CARBIDE BURR, 1/4" DIAMOND PIN	0.220	5.8	1/8	SHORT
12R0410-13	3 MM	REAR	60000	1 FT | 0.3 M	1/4" CARBIDE BURR, 1/4" DIAMOND PIN	0.220	5.8	1/8	LONG
12R0410-16	3/32 IN	REAR	60000	1 FT | 0.3 M	1/4" CARBIDE BURR, 1/4" DIAMOND PIN	0.220	5.8	1/8	LONG
12R0410-18	1/8 IN	REAR	60000	1 FT | 0.3 M	1/4" CARBIDE BURR, 1/4" DIAMOND PIN	0.220	5.8	1/8	SHORT
12R0410-43	3 MM	REAR	60000	4 FT | 1.2 M	1/4" CARBIDE BURR, 1/4" DIAMOND PIN	0.220	5.8	1/8	SHORT

Do not attach a quick-disconnect fitting directly to the tool.
Standard Equipment: Applicable collet, collet wrenches, collet guard, 5 ft/1.5 m air supply hose, 1 ft./0.3 m overhose

MP42 Series Pencil Grinders

70,000 RPM 0.06 hp (0.044 kW)

- Ideal for precision deburring, blending and smoothing applications
- Lightweight, ergonomically designed to be virtually vibration free
- Rear exhaust directs air away from work
- Standard with 5 ft air hose and 1 ft overhose
- Ideal for tight spots
- Slim comfortable design with ergonomic grip for operator comfort
- Double bearings for increased durability on MP4200 inline
- Includes both 1/8 in and 3 mm collets

MODEL	TOOL CONFIGURATION	COLLET SIZE	EXHAUST	FREE SPEED	ABRASIVE CAPACITY GRINDER	TYPE HOUSING	OVERHOSE	WEIGHT	LENGTH	AIR INLET SIZE
				R/MIN				LB	IN	IN
MP4200	INLINE	1/8 IN	REAR	70000	1/4" CARBIDE BURR, 1/4" DIAMOND PIN	ALUMINUM	1 FT | 0.3 M	0.441	5.4	1/8
MP4201	RIGHT ANGLE	1/8 IN	REAR	70000	1/4" CARBIDE BURR, 1/4" DIAMOND PIN	ALUMINUM	1 FT | 0.3 M	0.441	5.9	1/8

General: Air Inlet 1/4" NPT. Use 1/4" (6.4 mm) I.D. hose. All tools performance rated @ 90psi (620 kPa) air pressure.
Optional:
MP4200 - 70617600 1/8" collet kit (5 pcs.), 70620200PT - 3mm collet kit (5 pcs.)
MP4201 - 70618800 1/8" collet kit (5 pcs.), 70620400PT - 3mm collet kit (5 pcs.)

220G Series - Precision Grinder - Push-Pull Start

60,000 RPM 0.1 hp (0.74 kW)

- Industrial bearing provides long life expectancy
- Designed for precision deburring and metal removal
- Compact and light weight housing
- Available in a kit with a complete set of accessories

MODEL	COLLET SIZE	EXHAUST	FREE SPEED	ABRASIVE CAPACITY GRINDER	TYPE HOUSING	WEIGHT	LENGTH	AIR INLET SIZE
			R/MIN			LB	IN	IN
220G-600-C2	1/8 IN	FRONT	60000	1/4" CARBIDE BURR	ALUMINUM	0.220	4.60	1/8
220G-600-C2-K*		FRONT	60000	1/4" CARBIDE BURR	ALUMINUM	0.441	4.60	1/8

Standard Equipment: Applicable collet, collet wrenches, 8 ft./2.4m air supply hose, built-in air filter, speed regulator
* Kit includes grinder, hose, collet, collet wrench, cylindrical plain burr 413680, cylindrical radius end burr 413681, cone & taper burr 413682, and tree point burr 413683, carrying case.

18 Series - Steel

50,000 RPM 0.1 hp (0.074 kW)

- Industrial bearing provides long life expectancy
- Designed for precision deburring and metal removal
- Compact and light weight housing
- Available in a kit with a complete set of accessories

MODEL	COLLET SIZE	EXHAUST	ABRASIVE CAPACITY GRINDER	TYPE HOUSING	WEIGHT	LENGTH	AIR INLET SIZE
					LB	IN	IN
18G-810D	1/4 IN	FRONT	1/4" CARBIDE BURR, 1/2" MOUNTED WHEEL	STEEL	0.88	5.9	1/8
18G-810D-08	1/8 IN	FRONT	1/4" CARBIDE BURR, 1/2" MOUNTED WHEEL	STEEL	0.88	5.9	1/8

Use dry air at 90psi maximum: Do not lubricate turbine grinders. Lubrication will be detrimental to the operation and life of turbine tools. Do not attach a quick-disconnect fitting directly to the tool.
Standard Equipment: 1/4" collet - 7808, Nosepiece -1011790, 7/16" Spindle Wrench - 1011691, 11/16" Collet Nut Wrench - 1014472

15Z Series - Air Marking Pen - Cleco Dotco

20,000 RPM 0.06 hp (0.044 kW)

- Sliding sleeve throttle
- Ideal for marking a variety of materials, ranging from Aluminum to Titanium
- Carbide tipped stylus
- Weighs only 4 oz | 113 grams

MODEL	FREE SPEED	ABRASIVE CAPACITY	WEIGHT	AIR INLET SIZE	LENGTH	DIAMETER
	R/MIN		LB	IN	IN	IN
15Z-710	20000	1/8" STYLUS	0.220	1/4	5.5	0.6

Do not attach a quick-disconnect fitting directly to the tool.
Standard Equipment: Carbide tipped stylus

15Z Series - Air Marking Pen Kit

20,000 RPM 0.06 hp (0.044 kW)

- Includes 15Z-710 air marking pen
- 5' (1.5m) air hose assembly
- 3/16" ID with 1/8" NPT fittings
- Includes two 1/2" wrenches
- Durable and convenient carrying case

MODEL	FREE SPEED	ABRASIVE CAPACITY	WEIGHT	AIR INLET SIZE	LENGTH	DIAMETER
	R/MIN		LB	IN	IN	IN
15Z-720	20000	1/8" STYLUS	0.441	1/4	5.5	0.6

Do not attach a quick-disconnect fitting directly to the tool.
Standard Equipment: Carbide tipped stylus

12-05 Series - Precision Grinder- with Collet Guard - Cleco Dotco

40,000 RPM 0.2 hp (0.15 kW)

- Robust design have been continuously improved for six decades
- Compact size for ultimate control - easy access to confined areas
- Ideal for die and mold work as well as deburring
- Comprehensive selection of speed available
- Equipped with dial throttle

MODEL	COLLET SIZE	EXHAUST	FREE SPEED R/MIN	ABRASIVE CAPACITY GRINDER	TYPE HOUSING	WEIGHT LB	LENGTH IN	AIR INLET SIZE IN
12R0500-36	1/4 IN	FRONT	40000	1/4" CARBIDE BURR, 7/8" MOUNTED WHEEL	COMPOSITE	0.66	5.9	1/8

All tools performance rated @ 90psi / 620 kPa air pressure.
Minimum Hose I.D.: 3/16in / 4.8mm
Standard Equipment: Applicable collet, collet wrenches, collet guard, 7 ft / 2.1m air supply hose

12-10 Series - Die Grinder - 300 Series Collet - Cleco Dotco

12,000 - 34,000 RPM 0.3 hp (0.22 kW)

- Durable and ergonomic composite housing
- Compact size for ultimate control - easy access to confined areas
- Ideal for die and mold work as well as deburring
- Comprehensive selection of speed available
- Standard equipped with lock-off lever

MODEL	COLLET SIZE	EXHAUST	FREE SPEED R/MIN	ABRASIVE CAPACITY GRINDER	TYPE HOUSING	WEIGHT LB	LENGTH IN	AIR INLET SIZE IN
12L1045-36	1/4 IN	FRONT	12000	1/2" CARBIDE BURR, 1" MOUNTED WHEEL	COMPOSITE	0.88	6.0	1/4
12L1045-36M6*	1/4 IN | 6 MM	FRONT	12000	1/2" CARBIDE BURR, 1" MOUNTED WHEEL	COMPOSITE	0.88	6.0	1/4
12L1046-36	1/4 IN	FRONT	18000	1/2" CARBIDE BURR, 1" MOUNTED WHEEL	COMPOSITE	0.88	6.0	1/4
12L1028-36	1/4 IN	REAR	20000	1/2" CARBIDE BURR, 1" MOUNTED WHEEL	COMPOSITE	0.88	6.0	1/4
12L1028-36M6*	1/4 IN | 6 MM	REAR	20000	1/2" CARBIDE BURR, 1" MOUNTED WHEEL	COMPOSITE	0.88	6.0	1/4
12L1003-36	1/4 IN	FRONT	25000	1/2" CARBIDE BURR, 1" MOUNTED WHEEL	COMPOSITE	0.88	6.0	1/4
12L1082-36	1/4 IN	REAR	25000	1/2" CARBIDE BURR, 1" MOUNTED WHEEL	COMPOSITE	0.88	6.0	1/4
12L1082-36M6*	1/4 IN | 6 MM	REAR	25000	1/2" CARBIDE BURR, 1" MOUNTED WHEEL	COMPOSITE	0.88	6.0	1/4
12L1000-36	1/4 IN	FRONT	30000	1/2" CARBIDE BURR, 1" MOUNTED WHEEL	COMPOSITE	0.88	6.0	1/4
12L1000-36M6*	1/4 IN | 6 MM	FRONT	30000	1/2" CARBIDE BURR, 1" MOUNTED WHEEL	COMPOSITE	0.88	6.0	1/4

All tools performance rated @ 90 psi / 620 kPa air pressure.

Standard Equipment: Applicable collet, collet wrenches

Minimum Hose I.D.: 1/4 in / 6.4 mm
* -36M6 includes both 1/4" Collet and 6 mm Collet. -36M6OH termination includes both 1/4" Collet and 6 mm Collet and overhose

MODEL	COLLET SIZE	EXHAUST	FREE SPEED R/MIN	ABRASIVE CAPACITY GRINDER	TYPE HOUSING	WEIGHT LB	LENGTH IN	AIR INLET SIZE IN
12L1080-36	1/4 IN	REAR	30000	1/2" CARBIDE BURR, 1" MOUNTED WHEEL	COMPOSITE	0.88	6.0	1/4
12L1080-36M6*	1/4 IN | 6 MM	REAR	30000	1/2" CARBIDE BURR, 1" MOUNTED WHEEL	COMPOSITE	0.88	6.0	1/4
12L1080-36M6OH*	1/4 IN | 6 MM	REAR	30000	1/2" CARBIDE BURR, 1" MOUNTED WHEEL	COMPOSITE	0.88	6.0	1/4
12L1001-36	1/4 IN	FRONT	34000	1/2" CARBIDE BURR, 1" MOUNTED WHEEL	COMPOSITE	0.88	6.0	1/4
12L1081-36	1/4 IN	REAR	34000	1/2" CARBIDE BURR, 1" MOUNTED WHEEL	COMPOSITE	0.88	6.0	1/4
12L1081-36M6OH*	1/4 IN | 6 MM	REAR	34000	1/2" CARBIDE BURR, 1" MOUNTED WHEEL	COMPOSITE	0.88	6.0	1/4
12S1008-36	1/4 IN	FRONT	20000	1/2" CARBIDE BURR, 1" MOUNTED WHEEL	COMPOSITE	0.88	6.0	1/4

All tools performance rated @ 90 psi / 620 kPa air pressure.

Standard Equipment: Applicable collet, collet wrenches

Minimum Hose I.D.: 1/4 in / 6.4 mm

* -36M6 includes both 1/4" Collet and 6 mm Collet. -36M6OH termination includes both 1/4" Collet and 6 mm Collet and overhose

10-10 Series - Die Grinder - 200 & 300 Series Collet - Cleco Dotco

25,000 - 34,000 RPM 0.3 hp (0.22 kW)

- Durable aluminum housing
- Compact size for ultimate control - easy access to confined areas
- Ideal for die and mold work as well as deburring
- Comprehensive selection of speed available

MODEL	COLLET SIZE	EXHAUST	FREE SPEED R/MIN	ABRASIVE CAPACITY GRINDER	TYPE HOUSING	WEIGHT LB	LENGTH IN	AIR INLET SIZE IN
10L1003-36	1/4 IN	FRONT	25000	1/2" CARBIDE BURR, 1" MOUNTED WHEEL	ALUMINUM	0.66	4.60	1/4
10L1082-36	1/4 IN	REAR	25000	1/2" CARBIDE BURR, 1" MOUNTED WHEEL	ALUMINUM	0.66	4.60	1/4
10L1000-36	1/4 IN	FRONT	30000	1/2" CARBIDE BURR, 1" MOUNTED WHEEL	ALUMINUM	0.66	4.60	1/4
10L1080-36	1/4 IN	REAR	30000	1/2" CARBIDE BURR, 1" MOUNTED WHEEL	ALUMINUM	0.66	4.60	1/4
10L1097-36	1/4 IN	REAR	30000	1/2" CARBIDE BURR, 1" MOUNTED WHEEL	ALUMINUM WITH BAIL	0.66	4.60	1/4
10N1080-01*	1/4 IN	REAR	30000	1/2" CARBIDE BURR, 1" MOUNTED WHEEL	ALUMINUM	0.66	4.60	1/4
10L1001-36	1/4 IN	FRONT	34000	1/2" CARBIDE BURR, 1" MOUNTED WHEEL	ALUMINUM	0.66	4.60	1/4
10L1081-36	1/4 IN	REAR	34000	1/2" CARBIDE BURR, 1" MOUNTED WHEEL	ALUMINUM	0.66	4.60	1/4
10N1081-36*	1/4 IN	REAR	34000	1/2" CARBIDE BURR, 1" MOUNTED WHEEL	ALUMINUM	0.66	4.60	1/4

All tools performance rated @ 90 psi / 620 kPa air pressure.
Standard Equipment: Applicable collet, collet wrenches
Minimum Hose I.D.: 1/4 in / 6.4 mm
* Tool will start with applied air, intended for fixtured applications

12-20 Series - Die Grinder - 200 Series Collet - Cleco Dotco

12,000 - 25,000 RPM 0.6 hp (0.45 kW)

- Ergonomic composite housing
- Front and rear exhaust models available
- Designed to work comfortably with the operator
- Standard equipped with 200 series collet

MODEL	COLLET SIZE	EXHAUST	FREE SPEED R/MIN	ABRASIVE CAPACITY GRINDER	TYPE HOUSING	WEIGHT LB	LENGTH IN	AIR INLET SIZE IN
12L2003-01	1/4 IN	FRONT	12000	3/4" CARBIDE BURR, 1.5" MOUNTED WHEEL	COMPOSITE	1.32	6.9	1/4
12L2002-01	1/4 IN	FRONT	18000	3/4" CARBIDE BURR, 1.5" MOUNTED WHEEL	COMPOSITE	1.32	6.9	1/4
12L2001-01	1/4 IN	FRONT	20000	3/4" CARBIDE BURR, 1.5" MOUNTED WHEEL	COMPOSITE	1.32	6.9	1/4
12L2081-01	1/4 IN	REAR	20000	3/4" CARBIDE BURR, 1.5" MOUNTED WHEEL	COMPOSITE	1.32	6.9	1/4
12L2081-01M6*	1/4 IN | 6 MM	REAR	20000	3/4" CARBIDE BURR, 1.5" MOUNTED WHEEL	COMPOSITE	1.32	6.9	1/4
12L2081-01M6OH*	1/4 IN | 6 MM	REAR	20000	3/4" CARBIDE BURR, 1.5" MOUNTED WHEEL	COMPOSITE	1.32	6.9	1/4
12L2000-01	1/4 IN	FRONT	25000	3/4" CARBIDE BURR, 1.5" MOUNTED WHEEL	COMPOSITE	1.32	6.9	1/4
12L2080-01	1/4 IN	REAR	25000	3/4" CARBIDE BURR, 1.5" MOUNTED WHEEL	COMPOSITE	1.32	6.9	1/4
12L2080-01M6*	1/4 IN | 6 MM	REAR	25000	3/4" CARBIDE BURR, 1.5" MOUNTED WHEEL	COMPOSITE	1.32	6.9	1/4
12L2082-01	1/4 IN	REAR	18000	3/4" CARBIDE BURR, 1.5" MOUNTED WHEEL	COMPOSITE	1.32	6.9	1/4

All tools performance rated @ 90psi / 620 kPa air pressure.
Standard Equipment: Applicable collet, collet wrenches
Minimum Hose I.D.: 1/4in / 6.4mm
* -36M6 includes both 1/4" Collet and 6 mm Collet. -36M6OH termination includes both 1/4" Collet and 6 mm Collet and overhose. -01M6 includes both 1/4" Collet and 6 mm Collet. -01M6OH termination includes both 1/4" Collet and 6 mm Collet and overhose.

10-20 Series - Die Grinder - 200 & 300 Series Collet - Cleco Dotco

18,000 - 25,000 RPM 0.6 hp (0.45 kW)

- Durable aluminum housing
- Front, side, and rear exhaust models available
- Designed to work comfortably with the operator

MODEL	COLLET SIZE	EXHAUST	FREE SPEED R/MIN	ABRASIVE CAPACITY GRINDER	TYPE HOUSING	WEIGHT LB	LENGTH IN	AIR INLET SIZE IN
10L2002-36	1/4 IN	FRONT	18000	3/4" CARBIDE BURR, 1.5" MOUNTED WHEEL	ALUMINUM	1.32	6.6	1/4
10L2082-01	1/4 IN	REAR	18000	3/4" CARBIDE BURR, 1.5" MOUNTED WHEEL	ALUMINUM	1.32	6.6	1/4
10L2005-01	1/4 IN	FRONT	20000	3/4" CARBIDE BURR, 1.5" MOUNTED WHEEL	ALUMINUM	1.32	5.7	1/4

All tools performance rated @ 90 psi / 620 kPa air pressure.
Standard Equipment: Applicable collet, collet wrenchesMinimum Hose I.D.: 5/16 in / 7.9 mm
Termination -01 = 200 Series collet
Termination -36 = 300 series collet
* -36M6 includes both 1/4" Collet and 6 mm Collet. -36M6OH termination includes both 1/4" Collet and 6 mm Collet and overhose. -01M6 includes both 1/4" Collet and 6 mm Collet. -01M6OH termination includes both 1/4" Collet and 6 mm Collet and overhose.
** Tool will start with applied air, intended for fixtured applications

MODEL	COLLET SIZE	EXHAUST	FREE SPEED R/MIN	ABRASIVE CAPACITY GRINDER	TYPE HOUSING	WEIGHT LB	LENGTH IN	AIR INLET SIZE IN
10L2081-01	1/4 IN	REAR	20000	3/4" CARBIDE BURR, 1.5" MOUNTED WHEEL	ALUMINUM	1.32	5.8	1/4
10L2081-01M6*	1/4 IN | 6 MM	REAR	20000	3/4" CARBIDE BURR, 1.5" MOUNTED WHEEL	ALUMINUM	1.32	5.8	1/4
10L2000-01	1/4 IN	FRONT	25000	3/4" CARBIDE BURR, 1.5" MOUNTED WHEEL	ALUMINUM	1.32	5.8	1/4
10L2000-36	1/4 IN	FRONT	25000	3/4" CARBIDE BURR, 1.5" MOUNTED WHEEL	ALUMINUM	1.10	6.4	1/4
10L2080-01	1/4 IN	REAR	25000	3/4" CARBIDE BURR, 1.5" MOUNTED WHEEL	ALUMINUM	1.32	5.8	1/4
10L2080-01M6*	1/4 IN | 6 MM	REAR	25000	3/4" CARBIDE BURR, 1.5" MOUNTED WHEEL	ALUMINUM	1.32	5.8	1/4
10L2080-36	1/4 IN	REAR	25000	3/4" CARBIDE BURR, 1.5" MOUNTED WHEEL	ALUMINUM	1.32	6.4	1/4
10N2080-01**	1/4 IN	REAR	25000	3/4" CARBIDE BURR, 1.5" MOUNTED WHEEL	ALUMINUM	1.32	5.8	1/4

All tools performance rated @ 90 psi / 620 kPa air pressure.
Standard Equipment: Applicable collet, collet wrenchesMinimum Hose I.D.: 5/16 in / 7.9 mm
Termination -01 = 200 Series collet
Termination -36 = 300 series collet
* -36M6 includes both 1/4" Collet and 6 mm Collet. -36M6OH termination includes both 1/4" Collet and 6 mm Collet and overhose. -01M6 includes both 1/4" Collet and 6 mm Collet. -01M6OH termination includes both 1/4" Collet and 6 mm Collet and overhose.
** Tool will start with applied air, intended for fixtured applications

216 Series - 200 Series Collet

25,000 RPM 0.7 hp (0.45 kW)

- Designed for demands of heavy industries, such as shipbuilding, foundries, metal fabrication, etc.
- Rugged advanced alloy housing
- Front and side exhaust models available

MODEL	COLLET SIZE	EXHAUST	FREE SPEED R/MIN	ABRASIVE CAPACITY GRINDER	TYPE HOUSING	WEIGHT LB	LENGTH IN	AIR INLET SIZE IN
216GLFB-250-C4	1/4 IN	FRONT	25000	3/4" CARBIDE BURR	ALUMINUM	1.32	0.63	1/4
216GLSB-250-C4	1/4 IN	SIDE	25000	3/4" CARBIDE BURR	ALUMINUM	1.32	0.63	1/4

All tools performance rated @ 90psi / 620 kPa air pressure.
Standard Equipment: Applicable collet, collet wrenches
Minimum Hose I.D.: 1/4in / 6.4mm

236 Series - 200 Series Collet

18,000 - 25,000 RPM 0.6 hp (0.45 kW)

- Designed for demands of heavy industries, such as shipbuilding, foundries, metal fabrication, etc.
- Durable advanced alloy housing
- Front, side, and rear exhaust models available

MODEL	COLLET SIZE	EXHAUST	FREE SPEED R/MIN	ABRASIVE CAPACITY GRINDER	TYPE HOUSING	WEIGHT LB	LENGTH IN	AIR INLET SIZE IN
236GLF-180-C4	1/4 IN	FRONT	18000	1" (25MM) CARBIDE BURR, 2" (50MM) MOUNTED WHEEL	ALUMINUM	1.32	6.8	1/4
236GLR-200-C4	1/4 IN	REAR	20000	1" (25MM) CARBIDE BURR, 2" (50MM) MOUNTED WHEEL	ALUMINUM	1.32	7.4	1/4
236GLF-250-C6	3/8 IN	FRONT	25000	1" (25MM) CARBIDE BURR, 2" (50MM) MOUNTED WHEEL	ALUMINUM	1.32	6.8	1/4
236GLR-180-C4	1/4 IN	REAR	18000	1" CARBIDE BURR	ALUMINUM	1.32	7.4	1/4
236GLS-240-C4	1/4 IN	SIDE	24000	1" CARBIDE BURR	ALUMINUM	1.32	6.8	1/4
236GLR-250-C4	1/4 IN	REAR	25000	1" CARBIDE BURR	ALUMINUM	1.32	7.4	1/4
236GLF-250-C4	1/4 IN	FRONT	25000	1" CARBIDE BURR	ALUMINUM	1.32	6.8	1/4
236GLS-180-C4	1/4 IN	SIDE	18000	1" (25MM) CARBIDE BURR, 2" (50MM) MOUNTED WHEEL	ALUMINUM	1.32	6.8	1/4

All tools performance rated @ 90psi / 620 kPa air pressure.
Standard Equipment: Applicable collet, collet wrenches
Minimum Hose I.D.: 5/16in / 7.9mm

12-25 Series - Die Grinder - 200 & 300 Series Collet - Cleco Dotco

12,000 - 23,000 RPM 0.9 hp (0.67 kW)

- Ergonomic composite housing
- Optional over-hose available
- High power-to-weight ratio for optimal productivity

MODEL	COLLET SIZE	EXHAUST	FREE SPEED R/MIN	ABRASIVE CAPACITY GRINDER	TYPE HOUSING	WEIGHT LB	LENGTH IN	AIR INLET SIZE IN
12L2542-01	1/4 IN	REAR	12000	1" CARBIDE BURR, 1.5" MOUNTED WHEEL	COMPOSITE	1.76	7.4	1/4
12L2562-01	1/4 IN	FRONT	12000	1" CARBIDE BURR, 1.5" MOUNTED WHEEL	COMPOSITE	1.76	7.4	1/4
12L2562-01M6	1/4 IN | 6 MM	FRONT	12000	1" CARBIDE BURR, 1.5" MOUNTED WHEEL	COMPOSITE	1.76	7.4	1/4
12L2565-01	1/4 IN	FRONT	15000	1" CARBIDE BURR, 1.5" MOUNTED WHEEL	COMPOSITE	1.76	7.4	1/4
12L2502-01*	1/4 IN	FRONT	18000	1" CARBIDE BURR, 1.5" MOUNTED WHEEL	COMPOSITE	1.76	7.3	1/4
12L2568-01	1/4 IN	FRONT	18000	1" CARBIDE BURR, 1.5" MOUNTED WHEEL	COMPOSITE	1.76	7.4	1/4
12L2582-01*	1/4 IN	REAR	18000	1" CARBIDE BURR, 1.5" MOUNTED WHEEL	COMPOSITE	1.76	7.3	1/4
12L2500-01*	1/4 IN	FRONT	23000	1" CARBIDE BURR, 1.5" MOUNTED WHEEL	COMPOSITE	1.76	7.3	1/4

Governed Speed
* All tools performance rated @ 90 psi / 620 kPa air pressure.
Standard Equipment: Applicable collet, collet wrenches
Minimum Hose I.D.: 5/16 in / 7.9 mm
Termination -01 = 200 Series collet
Termination -36 = 300 series collet
** -36M6 includes both 1/4" Collet and 6 mm Collet. -36M6OH termination includes both 1/4" Collet and 6 mm Collet and overhose. -01M6 includes both 1/4" Collet and 6 mm Collet. -01M6OH termination includes both 1/4" Collet and 6 mm Collet and overhose.

MODEL	COLLET SIZE	EXHAUST	FREE SPEED R/MIN	ABRASIVE CAPACITY GRINDER	TYPE HOUSING	WEIGHT LB	LENGTH IN	AIR INLET SIZE IN
12L2500-01M6**	1/4 IN | 6 MM	FRONT	23000	1" CARBIDE BURR, 1.5" MOUNTED WHEEL	COMPOSITE	1.76	7.3	1/4
12L2500-36*	1/4 IN	FRONT	23000	1" CARBIDE BURR, 1.5" MOUNTED WHEEL	COMPOSITE	1.76	8.0	1/4
12L2580-01*	1/4 IN	REAR	23000	1" CARBIDE BURR, 1.5" MOUNTED WHEEL	COMPOSITE	1.76	7.3	1/4
12L2580-01M6OH**	1/4 IN | 6 MM	REAR	23000	1" CARBIDE BURR, 1.5" MOUNTED WHEEL	COMPOSITE	1.76	7.3	1/4
12L2580-36*	1/4 IN	REAR	23000	1" CARBIDE BURR, 1.5" MOUNTED WHEEL	COMPOSITE	1.76	8.0	1/4
12L2582-01M6**	1/4 IN | 6 MM	REAR	18000	1" CARBIDE BURR, 1.5" MOUNTED WHEEL	COMPOSITE	1.76	7.3	1/4

Governed Speed
* All tools performance rated @ 90 psi / 620 kPa air pressure.
Standard Equipment: Applicable collet, collet wrenches
Minimum Hose I.D.: 5/16 in / 7.9 mm
Termination -01 = 200 Series collet
Termination -36 = 300 series collet
** -36M6 includes both 1/4" Collet and 6 mm Collet. -36M6OH termination includes both 1/4" Collet and 6 mm Collet and overhose. -01M6 includes both 1/4" Collet and 6 mm Collet. -01M6OH termination includes both 1/4" Collet and 6 mm Collet and overhose.

10-25 Series - Die Grinder - 200 & 300 Series Collet - Cleco Dotco

12,000 - 23,000 RPM 0.9 hp (0.67 kW)

- Aluminum housing
- Compact, yet powerful motor

MODEL	COLLET SIZE	EXHAUST	FREE SPEED R/MIN	ABRASIVE CAPACITY GRINDER	TYPE HOUSING	WEIGHT LB	LENGTH IN	AIR INLET SIZE IN
10L2562-01	1/4 IN	FRONT	12000	1" CARBIDE BURR, 1.5" MOUNTED WHEEL	ALUMINUM	1.98	7.0	1/4
10L2565-01	1/4 IN	FRONT	15000	1" CARBIDE BURR, 1.5" MOUNTED WHEEL	ALUMINUM	1.98	7.0	1/4
10L2502-01*	1/4 IN	FRONT	18000	1" CARBIDE BURR, 1.5" MOUNTED WHEEL	ALUMINUM	1.32	0.63	1/4
10L2568-01	1/4 IN	FRONT	18000	1" CARBIDE BURR, 1.5" MOUNTED WHEEL	ALUMINUM	1.54	7.3	1/4
10B2500-01*	1/4 IN	FRONT	23000	1" CARBIDE BURR, 1.5" MOUNTED WHEEL	ALUMINUM	1.32	0.63	1/4
10L2500-01*	1/4 IN	FRONT	23000	1" CARBIDE BURR, 1.5" MOUNTED WHEEL	ALUMINUM	1.32	0.63	1/4
10L2500-36*	1/4 IN	FRONT	23000	1" CARBIDE BURR, 1.5" MOUNTED WHEEL	ALUMINUM	1.32	7.1	1/4
10L2580-01*	1/4 IN	REAR	23000	1" CARBIDE BURR, 1.5" MOUNTED WHEEL	ALUMINUM	1.32	0.63	1/4
10L2580-36*	1/4 IN	REAR	23000	1" CARBIDE BURR, 1.5" MOUNTED WHEEL	ALUMINUM	1.54	7.9	1/4
10L2582-01*	1/4 IN	REAR	18000	1" CARBIDE BURR, 1.5" MOUNTED WHEEL	ALUMINUM	1.54	7.3	1/4

Governed; * All tools performance rated @ 90 psi / 620 kPa air pressure.
Standard Equipment: Applicable collet, collet wrenches
Minimum Hose I.D.: 5/16 in / 7.9 mm
Termination -01 = 200 Series collet
Termination -36 = 300 series collet

MP44 Series Die Grinder

20,000 RPM 0.3 hp (0.223 kW)

- Ideal for general purpose applications.
- Ergonomic grip for operator comfort
- 360° air inlet swivel

MODEL	COLLET SIZE	EXHAUST	FREE SPEED R/MIN	ABRASIVE CAPACITY GRINDER	TYPE HOUSING	WEIGHT LB	LENGTH IN	AIR INLET SIZE IN
MP4424	1/4 IN	REAR	20000	1/2" CARBIDE BURR, 1" MOUNTED WHEEL	COMPOSITE	1.32	6.4	1/4

General: Air Inlet 1/4" NPT. Use 1/4" (6.4 mm) I.D. hose. All tools performance rated @ 90psi (620 kPa) air pressure.

Optional: MP4424 & MP4430: 70619500 3/16" collet; 70610500 1/4" collet; 70610600 6 mm collet; MP4424: 543944 – 16oz. angle head grease.

MP44 Series Die Grinder

23,000 RPM 0.3 hp (0.223 kW)

- Ideal for general purpose applications.
- Ergonomic grip for operator comfort
- 360° air inlet swivel

MODEL	COLLET SIZE	EXHAUST	FREE SPEED R/MIN	ABRASIVE CAPACITY GRINDER	TYPE HOUSING	WEIGHT LB	LENGTH IN	AIR INLET SIZE IN
MP4430	1/4 IN	REAR	23000	1/2" CARBIDE BURR, 1" MOUNTED WHEEL	COMPOSITE	0.88	6.0	1/4

General: Air Inlet 1/4" NPT. Use 1/4" (6.4 mm) I.D. hose. All tools performance rated @ 90psi (620 kPa) air pressure.

Optional: MP4424 & MP4430: 70619500 3/16" collet; 70610500 1/4" collet; 70610600 6 mm collet; MP4424: 543944 – 16oz. angle head grease.

MP44 Series Die Grinder

25,000 RPM 0.5 hp (0.373 kW)

- Ideal for general purpose applications.
- Ergonomic grip for operator comfort
- 360° air inlet swivel

MODEL	COLLET SIZE	EXHAUST	FREE SPEED	ABRASIVE CAPACITY GRINDER	TYPE HOUSING	WEIGHT	LENGTH	AIR INLET SIZE
			R/MIN			LB	IN	IN
MP4458	1/4 IN	FRONT	25000	1" CARBIDE BURR, 1.5" MOUNTED WHEEL	STEEL	1.32	6.1	1/4

General: Air Inlet 1/4" NPT. Use 1/4" (6.4 mm) I.D. hose. All tools performance rated @ 90psi (620 kPa) air pressure.

Optional: MP4424 & MP4430: 70619500 3/16" collet; 70610500 1/4" collet; 70610600 6 mm collet; MP4424: 543944 – 16oz. angle head grease.

12-11 Series - Extended - Die Grinder - Cleco Dotco

25,000 - 28,000 RPM 0.3 hp (0.22 kW)

- 3" | 75mm and 5" | 125mm extended housings available
- Overhose available
- Multiple industrial bearings for low vibration and perfect balance

MODEL	COLLET SIZE	EXHAUST	FREE SPEED	EXTENSION	ABRASIVE CAPACITY GRINDER	TYPE HOUSING	WEIGHT	LENGTH	AIR INLET SIZE
			R/MIN	IN			LB	IN	IN
12L1111-36	1/4 IN	FRONT	25000	3	1/2" CARBIDE BURR, 1" MOUNTED WHEEL	COMPOSITE	1.10	8.9	1/4
12L1112-36	1/4 IN	FRONT	25000	5	1/2" CARBIDE BURR, 1" MOUNTED WHEEL	COMPOSITE	1.32	10.9	1/4
12L1100-36	1/4 IN	FRONT	28000	3	1/2" CARBIDE BURR, 1" MOUNTED WHEEL	COMPOSITE	1.10	8.9	1/4
12L1101-36	1/4 IN	FRONT	28000	5	1/2" CARBIDE BURR, 1" MOUNTED WHEEL	COMPOSITE	1.32	10.9	1/4
12L1180-36	1/4 IN	REAR	28000	3	1/2" CARBIDE BURR, 1" MOUNTED WHEEL	COMPOSITE	1.10	8.9	1/4
12L1181-36	1/4 IN	REAR	28000	5	1/2" CARBIDE BURR, 1" MOUNTED WHEEL	COMPOSITE	1.32	10.9	1/4

All tools performance rated @ 90 psi / 620 kPa air pressure.
Standard Equipment: Applicable collet, collet wrenches
Minimum Hose I.D.: 1/4 in / 4.8 mm

10-11 Series - Extended - Die Grinder - 300 Series Collet - Cleco Dotco

25,000 - 28,000 RPM 0.3 hp (0.22 kW)

- 3” | 75mm & 5” | 125mm extended housing for hard to reach areas
- Available in a variety of speeds
- Balanced and comfortable to minimize fatigue

MODEL	COLLET SIZE	EXHAUST	FREE SPEED	EXTENSION	ABRASIVE CAPACITY GRINDER	TYPE HOUSING	WEIGHT	LENGTH	AIR INLET SIZE
			R/MIN	IN			LB	IN	IN
10L1111-36	1/4 IN	FRONT	25000	3	1/2” CARBIDE BURR, 1” MOUNTED WHEEL	ALUMINUM	1.10	7.6	1/4
10L1112-36	1/4 IN	FRONT	25000	5	1/2” CARBIDE BURR, 1” MOUNTED WHEEL	ALUMINUM	1.10	9.8	1/4
10L1100-36	1/4 IN	FRONT	28000	3	1/2” CARBIDE BURR, 1” MOUNTED WHEEL	ALUMINUM	1.10	7.6	1/4
10L1101-36	1/4 IN	FRONT	28000	5	1/2” CARBIDE BURR, 1” MOUNTED WHEEL	ALUMINUM	1.10	9.8	1/4
10L1101-36M6*	1/4 IN | 6 MM	FRONT	28000	5	1/2” CARBIDE BURR, 1” MOUNTED WHEEL	ALUMINUM	1.10	9.8	1/4
10L1180-36	1/4 IN	REAR	28000	3	1/2” CARBIDE BURR, 1” MOUNTED WHEEL	ALUMINUM	1.10	8.4	1/8
10L1181-36	1/4 IN	REAR	28000	5	1/2” CARBIDE BURR, 1” MOUNTED WHEEL	ALUMINUM	1.10	9.8	1/4

All tools performance rated @ 90 psi / 620 kPa air pressure.
Standard Equipment: Applicable collet, collet wrenches
Minimum Hose I.D.: 1/4 in / 6.4 mm
; * -36M6 includes both 1/4” Collet and 6 mm Collet. -36M6OH termination includes both 1/4” Collet and 6 mm Collet and overhose

12-26 Series - Extended - Die Grinder - 5” (127mm) Extension - 200 Series Collet - Cleco Dotco

12,000 - 22,000 RPM 0.9 hp (0.67 kW)

- 5” | 125mm Extended housing for hard to reach areas
- Available in a variety of speeds
- Balanced and comfortable to minimize fatigue

MODEL	COLLET SIZE	EXHAUST	FREE SPEED	ABRASIVE CAPACITY GRINDER	TYPE HOUSING	WEIGHT	LENGTH	AIR INLET SIZE
			R/MIN			LB	IN	IN
12L2602-01	1/4 IN	SIDE	18000	1” CARBIDE BURR, 1.5” MOUNTED WHEEL	COMPOSITE	2.87	12.9	1/4
12L2668-01*	1/4 IN	SIDE	18000	1” CARBIDE BURR, 1.5” MOUNTED WHEEL	COMPOSITE	2.87	12.9	1/4
12L2600-01	1/4 IN	SIDE	22000	1” CARBIDE BURR, 1.5” MOUNTED WHEEL	COMPOSITE	2.87	12.9	1/4
12L2680-01	1/4 IN	REAR	22000	1” CARBIDE BURR, 1.5” MOUNTED WHEEL	COMPOSITE	2.87	12.9	1/4
12L2682-01	1/4 IN	REAR	12000	1” CARBIDE BURR, 1.5” MOUNTED WHEEL	COMPOSITE	2.87	12.9	1/4

All tools performance rated @ 90 psi / 620 kPa air pressure.
Standard Equipment: Applicable collet, collet wrenches
Minimum Hose I.D.: 5/16 in / 7.9 mm
* Governed

12-26 Series - Die Grinder - Multiple Extension - 300 Series Collet - Cleco Dotco

18,000 RPM 0.9 hp (0.67 kW)

- Can be customized with multiple extensions for access to the most far-reaching areas
- Multiple industrial bearings provides optimal balance and power transfer
- Designed to work comfortably with the operator
- Available with 300 series 1/4” collet and 3/8-24” external thread

MODEL	COLLET SIZE	EXHAUST	FREE SPEED R/MIN	ABRASIVE CAPACITY GRINDER	TYPE HOUSING	WEIGHT LB	LENGTH IN	AIR INLET SIZE IN
12S2674-2C	3/8 IN-24E	REAR	18000	1.25” CONE OR PLUG WHEEL	COMPOSITE	4.19	23.5	1/4
12S2674-4C	3/8 IN-24E	REAR	18000	1.25” CONE OR PLUG WHEEL	COMPOSITE	6.6	38.0	1/4
12L2674-2A	1/4 IN	REAR	18000	3/4” CARBIDE BUR, 1-1/2” MOUNTED WHEEL	COMPOSITE	4.19	23.5	1/4
12L2674-3A	1/4 IN	REAR	18000	3/4” CARBIDE BURR, 1.5” MOUNTED WHEEL	COMPOSITE	5.3	30.8	1/4
12L2674-5A	1/4 IN	REAR	18000	3/4” CARBIDE BURR, 1.5” MOUNTED WHEEL	COMPOSITE	7.7	45.3	1/4
12S2674-2AM6*	1/4 IN | 6 MM E300	REAR	18000	3/4” CARBIDE BURR, 1.5” MOUNTED WHEEL	COMPOSITE	4.19	23.5	1/4
12S2674-4A	1/4 IN	REAR	18000	3/4” CARBIDE BURR, 1.5” MOUNTED WHEEL	COMPOSITE	6.6	38.0	1/4
12S2674-5C	3/8 IN-24E	REAR	18000	1.25” CONE OR PLUG WHEEL	COMPOSITE	7.7	45.3	1/4

All tools performance rated @ 90 psi / 620 kPa air pressure.
Standard Equipment: Applicable collet, collet wrenches
Minimum Hose I.D.: 5/16 in / 7.9 mm
Termination:
A - 1/4” Collet
C - 3/8”-24 e
12L and 12S have the same throttle configuration
* -2AM6 includes both 1/4” Collet and 6 mm e300 Collet.

236 Series - Extended - 200 Series Collet

18,000 - 24,000 RPM 0.9 hp (0.6 kW)

- Rugged all aluminum housing
- Heavy industrial use for shipyards, foundries, metal fabrication, rail yards, etc.
- 5” Extended housing for hard to reach areas
- Offers higher horsepower and torque levels than similar competitive tools

MODEL	COLLET SIZE	EXHAUST	FREE SPEED R/MIN	ABRASIVE CAPACITY GRINDER	TYPE HOUSING	WEIGHT LB	LENGTH IN	AIR INLET SIZE IN
236GEL-240-C4	1/4 IN	SIDE	24000	1” CARBIDE BURR, 2” MOUNTED WHEEL	ALUMINUM	2.20	12.4	1/4
236GELR-180-C4	1/4 IN	REAR	18000	1” (25MM) CARBIDE BURR, 2” (50MM) MOUNTED WHEEL	ALUMINUM	2.20	12.3	1/4

All tools performance rated @ 90psi / 620 kPa air pressure.
Standard Equipment: Applicable collet, collet wrenches
Minimum Hose I.D.: 5/16in / 7.9mm

25 Series - Grinder - Extended - Governed - 200 Series Collet

18,000 RPM 1.4 hp (1.0 kW)

- Lightweight, Ergonomic housing
- Heavy industrial use for shipyards, foundries, metal fabrication, rail yards, etc.
- Extended housing for hard to reach areas
- Offers higher horsepower and torque levels than similar competitive tools

MODEL	COLLET SIZE	EXHAUST	FREE SPEED R/MIN	ABRASIVE CAPACITY GRINDER	TYPE HOUSING	WEIGHT LB	LENGTH IN	AIR INLET SIZE IN
25GELC-120-C4	1/4 IN	REAR	12000	1.25" CARBIDE BURR, 2" MTD. WHEEL	ALUMINUM	3.09	14.5	3/8
25GELC-180-C4	1/4 IN	SIDE	18000	1.25" CARBIDE BURR, 2" MOUNTED WHEEL	ALUMINUM	3.09	14.5	3/8

All tools performance rated @ 90 psi / 620 kPa air pressure.
Standard Equipment: Applicable collet, collet wrenches
Minimum Hose I.D.: 3/8 in / 9.5 mm

12LF Series - Die Grinder - Right Angle - 300 Series Collet - Cleco Dotco

12,000 - 20,000 RPM 0.4 hp (0.29 kW)

- Composite housing
- Wide array of speeds; front and rear exhaust models available
- Ergonomic and balanced design minimized operator fatigue

MODEL	COLLET SIZE	EXHAUST	FREE SPEED R/MIN	ABRASIVE CAPACITY GRINDER	ABRASIVE CAPACITY SANDER	TYPE HOUSING	WEIGHT LB	LENGTH IN	HEAD HEIGHT IN	AIR INLET SIZE IN
12LF200-36	1/4 IN	FRONT	12000	1/2" CARBIDE BURR, 1" MOUNTED WHEEL	3" (75 MM) SANDING/ POLISHING DISC	COMPOSITE	1.10	6.6	2.70	1/4
12LF200-36M6*	1/4 IN | 6 MM	FRONT	12000	1/2" CARBIDE BURR, 1" MOUNTED WHEEL	3" (75 MM) SANDING/ POLISHING DISC	COMPOSITE	1.10	6.6	2.70	1/4
12LF280-36	1/4 IN	REAR	12000	1/2" CARBIDE BURR, 1" MOUNTED WHEEL	3" (75 MM) SANDING/ POLISHING DISC	COMPOSITE	1.10	6.6	2.70	1/4
12LF280-36M6*	1/4 IN | 6 MM	REAR	12000	1/2" CARBIDE BURR, 1" MOUNTED WHEEL	3" (75 MM) SANDING/ POLISHING DISC	COMPOSITE	1.10	6.6	2.70	1/4
12LF280-36M6OH*	1/4 IN | 6 MM	REAR	12000	1/2" CARBIDE BURR, 1" MOUNTED WHEEL	3" (75 MM) SANDING/ POLISHING DISC	COMPOSITE	1.10	6.6	2.70	1/4
12LF201-36	1/4 IN	FRONT	20000	1/2" CARBIDE BURR, 1" MOUNTED WHEEL	2" (50 MM) SANDING/ POLISHING DISC	COMPOSITE	1.10	6.6	2.70	1/4
12LF201-36M6*	1/4 IN | 6 MM	FRONT	20000	1/2" CARBIDE BURR, 1" MOUNTED WHEEL	2" (50 MM) SANDING/ POLISHING DISC	COMPOSITE	1.10	6.6	2.70	1/4
12LF281-36	1/4 IN	REAR	20000	1/2" CARBIDE BURR, 1" MOUNTED WHEEL	2" (50 MM) SANDING/ POLISHING DISC	COMPOSITE	1.10	6.6	2.70	1/4
12LF281-36M6*	1/4 IN | 6 MM	REAR	20000	1/2" CARBIDE BURR, 1" MOUNTED WHEEL	2" (50 MM) SANDING/ POLISHING DISC	COMPOSITE	1.10	6.6	2.70	1/4
12LF281-36M6OH*	1/4 IN | 6 MM	REAR	20000	1/2" CARBIDE BURR, 1" MOUNTED WHEEL	2" (50 MM) SANDING/ POLISHING DISC	COMPOSITE	1.10	6.6	2.70	1/4

All tools performance rated @ 90 psi / 620 kPa air pressure.
Standard Equipment: Applicable collet, collet wrenches
Minimum Hose I.D.: 1/4 in / 4.8 mm
* -36M6 includes both 1/4" Collet and 6 mm Collet. -36M6OH termination includes both 1/4" Collet and 6 mm Collet and overhose

10LF Series - Die Grinder - Right Angle - 300 Series Collet - Cleco Dotco

12,000 - 20,000 RPM 0.4 hp (0.29 kW)

- Composite housing
- Wide array of speeds; front and rear exhaust models available
- Ergonomic and balanced design minimized operator fatigue

MODEL	COLLET SIZE	EXHAUST	FREE SPEED R/MIN	ABRASIVE CAPACITY GRINDER	ABRASIVE CAPACITY SANDER	TYPE HOUSING	WEIGHT LB	LENGTH IN	HEAD HEIGHT IN	AIR INLET SIZE IN
10LF200-36	1/4 IN	FRONT	12000	1/2" CARBIDE BURR, 1" MOUNTED WHEEL	3" (75 MM) SANDING/POLISHING DISC	ALUMINUM	1.10	6.6	2.70	1/4
10LF200-36M6*	1/4 IN | 6 MM	FRONT	12000	1/2" CARBIDE BURR, 1" MOUNTED WHEEL	3" (75 MM) SANDING/POLISHING DISC	ALUMINUM	1.10	6.6	2.70	1/4
10LF280-36	1/4 IN	REAR	12000	1/2" CARBIDE BURR, 1" MOUNTED WHEEL	3" (75 MM) SANDING/POLISHING DISC	ALUMINUM	1.10	6.6	2.70	1/4
10LF280-36M6*	1/4 IN | 6 MM	REAR	12000	1/2" CARBIDE BURR, 1" MOUNTED WHEEL	3" (75 MM) SANDING/POLISHING DISC	ALUMINUM	1.10	6.6	2.70	1/4
10LF201-36	1/4 IN	FRONT	20000	1/2" CARBIDE BURR, 1" MOUNTED WHEEL	2" (50 MM) SANDING/POLISHING DISC	ALUMINUM	1.10	6.6	2.70	1/4
10LF201-36M6*	1/4 IN | 6 MM	FRONT	20000	1/2" CARBIDE BURR, 1" MOUNTED WHEEL	2" (50 MM) SANDING/POLISHING DISC	ALUMINUM	1.10	6.6	2.70	1/4
10LF281-36	1/4 IN	REAR	20000	1/2" CARBIDE BURR, 1" MOUNTED WHEEL	2" (50 MM) SANDING/POLISHING DISC	ALUMINUM	1.10	6.6	2.70	1/4

All tools performance rated @ 90 psi / 620 kPa air pressure.
Standard Equipment: Applicable collet, collet wrenches
Minimum Hose I.D.: 1/4 in / 4.8 mm
* -36M6 includes both 1/4" Collet and 6 mm Collet. -36M6OH termination includes both 1/4" Collet and 6 mm Collet and overhose

12-13 Series - Die Grinder - Right Angle - Gearless - 300 Series Collet - Cleco Dotco

20,000 - 30,000 RPM 0.3 hp (0.22 kW)

- Composite housing
- Wide array of speeds offered; front and rear exhaust models available
- Suitable for a wide range of finishing and deburring applications

MODEL	COLLET SIZE	EXHAUST	FREE SPEED	ABRASIVE CAPACITY GRINDER	ABRASIVE CAPACITY SANDER	TYPE HOUSING	WEIGHT	LENGTH	HEAD HEIGHT	AIR INLET SIZE
			R/MIN				LB	IN	IN	IN
12L1302-36	1/4 IN	FRONT	20000	1/2" CARBIDE BURR, 1" MOUNTED WHEEL	2" (50 MM) SANDING/POLISHING DISC	COMPOSITE	1.10	7.1	3.70	1/4
12L1301-36	1/4 IN	FRONT	25000	1/2" CARBIDE BURR, 1" MOUNTED WHEEL	2" (50 MM) SANDING/POLISHING DISC	COMPOSITE	1.10	7.1	3.70	1/4
12L1381-36	1/4 IN	REAR	25000	1/2" CARBIDE BURR, 1" MOUNTED WHEEL	2" (50 MM) SANDING/POLISHING DISC	COMPOSITE	1.10	7.1	3.70	1/4
12L1300-36	1/4 IN	FRONT	30000	1/2" CARBIDE BURR, 1" MOUNTED WHEEL	1" (25MM) SANDING/ POLISHING DISC	COMPOSITE	1.10	7.1	3.70	1/4
12L1380-36	1/4 IN	REAR	30000	1/2" CARBIDE BURR, 1" MOUNTED WHEEL	1" (25MM) SANDING/ POLISHING DISC	COMPOSITE	1.10	7.1	3.70	1/4
12L1382-36	1/4 IN	REAR	20000	1/2" CARBIDE BURR, 1" MOUNTED WHEEL	2" (50 MM) SANDING/POLISHING DISC	COMPOSITE	1.10	7.1	3.70	1/4

All tools performance rated @ 90 psi / 620 kPa air pressure.
Standard Equipment: Applicable collet, collet wrenches
Minimum Hose I.D.: 1/4 in / 4.8 mm

12-23 Series - Die Grinder - Right Angle - Gearless - 200 Series Collet - Cleco Dotco

20,000 RPM 0.5 hp (0.38 kW)

- Composite housing
- Suitable for a wide range of finishing and deburring applications
-

MODEL	COLLET SIZE	EXHAUST	FREE SPEED R/MIN	ABRASIVE CAPACITY GRINDER	TYPE HOUSING	WEIGHT LB	LENGTH IN	HEAD HEIGHT IN	AIR INLET SIZE IN
12L2384-01	1/4 IN	FRONT	20000	3/4" CARBIDE BURR, 1.25" MOUNTED WHEEL	COMPOSITE	1.98	7.5	5.5	1/4

All tools performance rated @ 90 psi / 620 kPa air pressure.
Standard Equipment: Applicable collet, collet wrenches
Minimum Hose I.D.: 1/4 in / 4.8 mm

12-22 Series - 300 Series Collet

12,000 - 18,000 RPM 0.6 hp (0.45 kW)

- Ergonomic composite housing
- Heavy duty low profile head for greater accessibility
- High output motor in a lightweight package
- 3" | 75mm Extended head available

MODEL	COLLET SIZE	EXHAUST	FREE SPEED R/MIN	ABRASIVE CAPACITY GRINDER	ABRASIVE CAPACITY SANDER	TYPE HOUSING	WEIGHT LB	LENGTH IN	HEAD HEIGHT IN	AIR INLET SIZE IN
12L2278-36	1/4 IN	REAR	14500	1/2" CARBIDE BURR | 1" MOUNTED WHEEL	4" (100MM) SANDING/POLISHING DISC	COMPOSITE	2.20	10.0	2.70	1/4
12L2218-36	1/4 IN	REAR	18000	1/2" CARBIDE BURR | 1" MOUNTED WHEEL	3" (50MM) SANDING/POLISHING DISC	COMPOSITE	1.76	7.5	2.70	1/4
12L2277-36	1/4 IN	REAR	12000	1/2" CARBIDE BURR | 1" MOUNTED WHEEL	4" (100MM) SANDING/POLISHING DISC	COMPOSITE	2.20	10.0	2.70	1/4

All tools performance rated @ 90 psi / 620 kPa air pressure.
Standard Equipment: Applicable collet, collet wrenches
Minimum Hose I.D.: 5/16 in / 7.9 mm

12-22 Series - Die Grinder - Right Angle - Heavy Duty Head - 200 Series Collet - Cleco Dotco

9,000 - 11,000 RPM 0.6 hp (0.45 kW)

- Composite housing
- Wide array of speeds; front, side, and rear exhaust models available
- Ergonomic and balanced design minimized operator fatigue

MODEL	COLLET SIZE	EXHAUST	FREE SPEED R/MIN	ABRASIVE CAPACITY GRINDER	TYPE HOUSING	WEIGHT LB	LENGTH IN	HEAD HEIGHT IN	AIR INLET SIZE IN
12L2251-01	1/4 IN	SIDE	9000	3/4" CARBIDE BURR, 2" MOUNTED WHEEL	COMPOSITE	3.31	9.3	3.90	1/4
12L2252-01	1/4 IN	SIDE	11000	3/4" CARBIDE BURR, 2" MOUNTED WHEEL	COMPOSITE	3.31	9.3	3.90	1/4

All tools performance rated @ 90 psi / 620 kPa air pressure.
Standard Equipment: Applicable collet, collet wrenches
Minimum Hose I.D.: 5/16 in / 7.9 mm

216 Series - Grinder - Heavy Duty Head - 200 Series Collet

11,500 - 16,500 RPM 0.7 hp (0.4 kW)

- Rugged and durable aluminum housing
- Designed for heavy industries such as shipbuilding, foundries, metal fabrication, etc.
- Robust angle head design provides excellent durability

MODEL	COLLET SIZE	EXHAUST	FREE SPEED R/MIN	ABRASIVE CAPACITY GRINDER	TYPE HOUSING	WEIGHT LB	LENGTH IN	HEAD HEIGHT IN	AIR INLET SIZE IN
216GLF-115A-C4	1/4 IN	FRONT	11500	1" CARBIDE BURR	ALUMINUM	2.43	7.1	2.20	1/4
216GLFC-165A-C4	1/4 IN	REAR	16500	3/4" CARBIDE BURR	ALUMINUM	1.76	9.1	2.20	1/4
216GLSC-165A-C4	1/4 IN	SIDE	16500	3/4" CARBIDE BURR	ALUMINUM	1.76	9.1	2.20	1/4

All tools performance rated @ 90 psi / 620 kPa air pressure.
Standard Equipment: Applicable collet, collet wrenches
Minimum Hose I.D.: 1/4 in / 4.8 mm

236 Series - Heavy Duty Head - 200 Series Collet

11,500 - 16,500 RPM 0.8 hp (0.6 kW)

- Rugged and durable aluminum housing
- Designed for heavy industries such as shipbuilding, foundries, metal fabrication, etc.
- Robust angle head design provides excellent durability

MODEL	COLLET SIZE	EXHAUST	FREE SPEED R/MIN	ABRASIVE CAPACITY GRINDER	TYPE HOUSING	WEIGHT LB	LENGTH IN	HEAD HEIGHT IN	AIR INLET SIZE IN
236GLF-115A-C4	1/4 IN	FRONT	11500	1" (25MM) CARBIDE BURR, 2" (50MM) MOUNTED WHEEL	ALUMINUM	2.65	7.6	2.20	1/4
236GLR-115A-C4	1/4 IN	REAR	11500	1" (25MM) CARBIDE BURR, 2" (50MM) MOUNTED WHEEL	ALUMINUM	2.20	8.3	2.20	1/4
236GLFC-165A-C4	1/4 IN	FRONT	16500	3/4" CARBIDE BURR	ALUMINUM	1.98	9.6	2.20	1/4
236GLSC-115A-C4	1/4 IN	SIDE	11500	1" (25MM) CARBIDE BURR, 2" (50MM) MOUNTED WHEEL	ALUMINUM	1.98	9.6	2.20	1/4

All tools performance rated @ 90 psi / 620 kPa air pressure.
Standard Equipment: Applicable collet, collet wrenches
Minimum Hose I.D.: 5/16 in / 7.9 mm

12-27 Series - Die Grinder - Heavy Duty Head - 200 Series Collet - Cleco Dotco

6,000 - 11,000 RPM 0.9 hp (0.67 kW)

- Composite housing
- Front, side and rear exhaust models available
- Robust design perfectly suited for industrial applications

MODEL	COLLET SIZE	EXHAUST	FREE SPEED R/MIN	ABRASIVE CAPACITY GRINDER	TYPE HOUSING	WEIGHT LB	LENGTH IN	HEAD HEIGHT IN	AIR INLET SIZE IN
12L2750-01	1/4 IN	SIDE	6000	1" CARBIDE BURR, 1" MOUNTED WHEEL	COMPOSITE	3.31	9.8	3.90	1/4
12L2780-01	1/4 IN	REAR	6000	3/4" CARBIDE BURR, 2" MOUNTED WHEEL	COMPOSITE	3.31	9.8	3.90	1/4
12L2752-01	1/4 IN	SIDE	11000	3/4" CARBIDE BURR, 2" MOUNTED WHEEL	COMPOSITE	3.31	9.8	3.90	1/4
12L2782-01	1/4 IN	REAR	11000	3/4" CARBIDE BURR, 2" MOUNTED WHEEL	COMPOSITE	3.31	9.8	3.90	1/4

All tools performance rated @ 90 psi / 620 kPa air pressure.
Standard Equipment: Applicable collet, collet wrenches
Minimum Hose I.D.: 5/16 in / 7.9 mm

12-27 Series - Die Grinder - Right Angle - 300 Series Collet - Cleco Dotco

18,000 RPM 0.9 hp (0.67 kW)

- Composite housing
- Powerful motor wiith rear exhaust
- Robust design perfectly suited for industrial applications
- Standard 3" | 75mm extension

MODEL	COLLET SIZE	EXHAUST	FREE SPEED R/MIN	ABRASIVE CAPACITY GRINDER	ABRASIVE CAPACITY SANDER	TYPE HOUSING	WEIGHT LB	LENGTH IN	HEAD HEIGHT IN	AIR INLET SIZE IN
12L2777-36	1/4 IN	REAR	12000	3/4" CARBIDE BURR, 1.25" MOUNTED WHEEL	4" (100MM) SANDING/ POLISHING DISC	COMPOSITE	2.20	10.5	2.90	1/4
12L2776-36	1/4 IN	REAR	13500	3/4" CARBIDE BURR, 1.25" MOUNTED WHEEL	4" (100MM) SANDING/ POLISHING DISC	COMPOSITE	2.20	10.5	2.90	1/4
12L2718-36	1/4 IN	REAR	18000	3/4" CARBIDE BURR, 1.25" MOUNTED WHEEL	4" (100MM) SANDING/ POLISHING DISC	COMPOSITE	1.98	8.0	2.90	1/4
12L2778-36	1/4 IN	REAR	14500	3/4" CARBIDE BURR, 1.25" MOUNTED WHEEL	4" (100MM) SANDING/ POLISHING DISC	COMPOSITE	2.20	10.5	2.90	1/4

All tools performance rated @ 90 psi / 620 kPa air pressure.
Standard Equipment: Applicable collet, collet wrenches
Minimum Hose I.D.: 5/16 in / 7.9 mm

216 Series - Grinder - Heavy Duty Head - Right Angle - Depressed Center Wheel

11,500 RPM 0.6 hp (0.4 kW)

- Rugged and durable aluminum housing
- Robust and long lasting angle head for the most demanding applications
- Powerful motor stays durable in the harshest environments

MODEL	EXHAUST	FREE SPEED R/MIN	ABRASIVE CAPACITY GRINDER	TYPE HOUSING	SPINDLE SIZE	WEIGHT LB	LENGTH IN	HEAD HEIGHT IN	AIR INLET SIZE IN
216GLF-115A-D3T45	FRONT	11500	4.5" (115MM) TYPE 27	ALUMINUM	3/8" - 24 E	2.65	7.1	3.20	1/4
216GLF-115A-D3T4	FRONT	11500	4" (100MM) TYPE 27	ALUMINUM	3/8" - 24 E	2.65	7.1	3.20	1/4
216GLF-115A-W3T4	FRONT	11500	4" (100MM) TYPE 1	ALUMINUM	3/8" - 24 E	2.65	7.1	3.20	1/4

All tools performance rated @ 90 psi / 620 kPa air pressure.
Minimum Hose I.D.: 5/16 in / 7.9 mm
Standard Equipment: Wheel guard, wheel adapter, spindle wrench, Operating instructions & service manual

216 Series - Grinder - Extended Head - Right Angle - Depressed Center Wheel

13,500 RPM 0.6 hp (0.4 kW)

- Rugged and durable aluminum housing
- Extended head for better reach and accessbility
- Lock-off lever for safe operation

MODEL	EXHAUST	FREE SPEED R/MIN	ABRASIVE CAPACITY GRINDER	TYPE HOUSING	SPINDLE SIZE	WEIGHT LB	LENGTH IN	HEAD HEIGHT IN	AIR INLET SIZE IN
216GLFB-135A-W3T4	FRONT	13500	4" (100MM) TYPE 1	ALUMINUM	3/8" - 24 E	2.20	9.6	2.20	1/4
216GLFB-135A-D3T4	FRONT	13500	4" (100MM) TYPE 27	ALUMINUM	3/8" - 24 E	2.65	9.1	2.20	1/4
216GLSB-135A-D3T4	SIDE	13500	4" (100MM) TYPE 27	ALUMINUM	3/8" - 24 E	2.43	9.1	2.20	1/4
216GLSB-135A-W3T4	SIDE	13500	4" (100MM) TYPE 1	ALUMINUM	3/8" - 24 E	2.43	9.1	2.20	1/4

All tools performance rated @ 90 psi / 620 kPa air pressure.
Minimum Hose I.D.: 5/16 in / 7.9 mm
Standard Equipment: Wheel guard, wheel adapter, spindle wrench, Operating instructions & service manual

12-27 Series - Die Grinder - Heavy Duty Head - Cleco Dotco

14,500 RPM 0.9 hp (0.67 kW)

- Ergonomic composite housing
- Durable and low profile angle head
- Low vibration and high output motor provides superior productivity

MODEL	EXHAUST	FREE SPEED R/MIN	ABRASIVE CAPACITY GRINDER	TYPE HOUSING	SPINDLE SIZE	WEIGHT LB	LENGTH IN	AIR INLET SIZE IN
12L2714-28	REAR	14500	4" (100MM) TYPE 1	COMPOSITE	3/8"	3.31	8.0	1/4
12L2718-28	REAR	18000	4" (100MM) TYPE 1	COMPOSITE	3/8"	3.31	8.0	1/4

All tools performance rated @ 90 psi / 620 kPa air pressure.
Minimum Hose I.D.: 1/2 in / 12.7 mm
Standard Equipment: Wheel guard and flange wrench

25 Series - Grinder - Governed - Right Angle

6,000 - 8,500 RPM 1.4 hp (1.3 kW)

- Rugged and durable aluminum housing
- Powerful and robust motor with side exhaust
- Heavy duty angle head designed to outperform and outlast

MODEL	EXHAUST	FREE SPEED	ABRASIVE CAPACITY GRINDER	TYPE HOUSING	SPINDLE SIZE	WEIGHT	LENGTH	HEAD HEIGHT	AIR INLET SIZE
		R/MIN				LB	IN	IN	IN
25GL-60A-W5T7	SIDE	6000	7" (180MM) TYPE 1	ALUMINUM	5/8" - 11 E	5.5	10.0	4.00	3/8
25GL-60A-D5T7	SIDE	6000	7" (180MM) TYPE 27	ALUMINUM	5/8" - 11 E	5.5	10.0	4.00	3/8
25GL-77A-D5T7	SIDE	7700	7" (180MM) TYPE 27	ALUMINUM	5/8" - 11 E	5.5	10.0	4.00	3/8
25GL-85A-D5T7	SIDE	8500	7" (180MM) TYPE 27	ALUMINUM	5/8" - 11 E	5.5	10.0	4.00	3/8

All tools performance rated @ 90 psi / 620 kPa air pressure.
Minimum Hose I.D.: 3/8 in / 9.5 mm
Standard Equipment: Wheel guard, flange wrench, Operating instructions & service manual

2260 Series - Right Angle Grinder

8,400 RPM 2.2 hp (1.6 kW)

- High performance 2.2HP motor, Governed at 8,000 rpm
- Available with 6", 7" guard options
- Reversible safety lever throttle
- Dual auxiliary handle positions
- Maximum material removal for a right angle grinder

MODEL	EXHAUST	FREE SPEED	ABRASIVE CAPACITY GRINDER	TYPE HOUSING	SPINDLE SIZE	WEIGHT	LENGTH	HEAD HEIGHT	AIR INLET SIZE
		R/MIN				LB	IN	IN	IN
2260AGL-06	SIDE	8400	6" (150MM), TYPE 27/42	ALUMINUM	5/8" - 11 E	7.3	12.1	2.90	1/2
2260AGL-07	SIDE	8400	7" (180MM), TYPE 27/42	ALUMINUM	5/8" - 11 E	7.3	12.1	2.90	1/2

All tools performance rated @ 90 psi / 620 kPa air pressure.
Minimum Hose I.D.: 3/4 in / 19 mm
Standard Equipment: Wheel guard, adapters, spindle wrenches, operating instructions & service manuals

236 Series - Grinder - Right Angle - Heavy Duty Head

11,500 RPM 0.9 hp (0.6 kW)

- Rugged and durable aluminum housing
- Heavy duty and extended head models available
- Designed for heavy duty material removal applications

MODEL	EXHAUST	FREE SPEED	ABRASIVE CAPACITY GRINDER	TYPE HOUSING	SPINDLE SIZE	WEIGHT	LENGTH	HEAD HEIGHT	AIR INLET SIZE
		R/MIN				LB	IN	IN	IN
236GLF-115A-W3T4	FRONT	11500	4" (100MM) TYPE 1	ALUMINUM	3/8" - 24 E	3.09	7.6	3.20	1/4
236GLR-115A-W3T4	REAR	11500	4" (100MM) TYPE 1	ALUMINUM	3/8" - 24 E	2.43	8.3	3.20	1/4
236GLS-115A-W3T4	SIDE	11500	4" (100MM) TYPE 1	ALUMINUM	3/8" - 24 E	2.43	8.3	3.20	1/4
236GLSB-115A-W3T4	SIDE	11500	4" (100MM) TYPE 1	ALUMINUM	3/8" - 24 E	1.98	9.6	3.20	1/4
236GLF-115A-D3T4	FRONT	11500	4" (100MM) TYPE 27	ALUMINUM	3/8" - 24 E	3.09	7.6	3.20	1/4
236GLR-115A-D3T4	REAR	11500	4" (100MM) TYPE 27	ALUMINUM	3/8" - 24 E	2.43	8.3	3.20	1/4
236GLFB-135A-D3T4	FRONT	13500	4" (100MM) TYPE 27	ALUMINUM	3/8" - 24 E	1.98	9.6	2.20	1/4
236GLRB-135A-D3T4	REAR	13500	4" (100MM) TYPE 27	ALUMINUM	3/8" - 24 E	1.98	7.6	2.20	1/4
236GLSB-135A-D3T4	SIDE	13500	4" (100MM) TYPE 27	ALUMINUM	3/8" - 24 E	1.98	9.6	2.20	1/4

All tools performance rated @ 90 psi / 620 kPa air pressure.
Minimum Hose I.D.: 1/2 in / 12.7 mm
Standard Equipment: Wheel guard and flange wrench

Right Angle Grinder

12,000 - 13500 RPM 1.7 hp (1.25 kW)

- High-performance 1.7Hp motor delivers maximum power
- Quick change spindle lock for fast and easy abrasive changes
- Quieter operation with rear exhaust overhose standard
- Ergonomic, anti-vibration handle for increased comfort and less operator fatigue
- Dual-layer, high-impact composite housing for extreme durability
- Versatile 207° adjustable guard for easy access to tight spaces
- Available in 4", 4.5" and 5" disc sizes for all Type 27, Type 27 Threaded Hub and Type 1 Abrasive disc's

MODEL	FREE SPEED	EXHAUST	WHEEL SIZE	WEIGHT	HEAD HEIGHT	AIR INLET SIZE	AIR CONSUMPTION AT FREE SPEED	VIBRATION	AIR CONSUMPTION AT LOAD
	R/MIN		IN	LB	IN	IN	SCFM	M/S^2	L/S
C3120A45-58OH	12000	REAR	4.5	3.98	3.03	3/8	35.7	7.3	30.9
C3120A45-M14OH	12000	REAR	4.5	3.98	3.03	3/8	35.7	7.3	30.9
C3120A5-58OH	12000	REAR	5	4.05	3.03	3/8	35.7	9.4	31.1
C3120A5-M14OH	12000	REAR	5	4.05	3.03	3/8	35.7	9.4	31.1
C3135A4-38OH	13500	REAR	4	3.78	3.03	3/8	49.5	4.8	32.4

236 Series - Grinder - Extended Head

13,500 RPM 0.8 hp (0.6kW)

- Rugged and durable aluminum housing
- Heavy duty and extended head models available
- Designed for heavy duty material removal applications

MODEL	EXHAUST	FREE SPEED R/MIN	ABRASIVE CAPACITY GRINDER	TYPE HOUSING	SPINDLE SIZE	WEIGHT LB	LENGTH IN	AIR INLET SIZE IN
236GLFB-135A-W3T4	FRONT	13500	4" (100MM) TYPE 1	ALUMINUM	3/8" - 24 E	1.98	9.6	1/4
236GLRB-135A-W3T4	REAR	13500	4" (100MM) TYPE 1	ALUMINUM	3/8" - 24 E	1.98	7.6	1/4
236GLSB-135A-W3T4	SIDE	13500	4" (100MM) TYPE 1	ALUMINUM	3/8" - 24 E	1.98	9.6	1/4

All tools performance rated @ 90psi / 620 kPa air pressure.
Minimum Hose I.D.: 1/2in / 12.7mm
Standard Equipment: Wheel guard and flange wrench

236 Series - Cone/Plug Wheel - Inline

18,000 - 24,000 RPM 0.9 hp (0.7 kW)

- Rugged and durable aluminum housing
- Side and rear exhaust models available

MODEL	EXHAUST	ABRASIVE CAPACITY GRINDER	TYPE HOUSING	SPINDLE SIZE	WEIGHT LB	LENGTH IN	AIR INLET SIZE IN
236GELR-180-P3T	REAR	1.25" (31MM) CONE OR PLUG WHEEL	ALUMINUM	3/8" - 24 E	2.20	12.3	1/4
236GEL-240-P3T	SIDE	1.25" (31MM) CONE OR PLUG WHEEL	ALUMINUM	3/8" - 24 E	2.20	12.3	1/4

All tools performance rated @ 90psi / 620 kPa air pressure.
Standard Equipment: Applicable collet, collet wrenches
Minimum Hose I.D.: 5/16in / 7.9mm

25 Series - Grinder - Extended

14,000 - 18,000 RPM 1.4 hp (1.3 kW)

- Rugged and durable aluminum housing
- Governor speed control maintains RPM under load
- Safety- lock throttle lever prevents accidental start up

MODEL	EXHAUST	FREE SPEED R/MIN	ABRASIVE CAPACITY GRINDER	TYPE HOUSING	SPINDLE SIZE	WEIGHT LB	LENGTH IN	AIR INLET SIZE IN
25GELC-140-P3T	SIDE	14000	2" (50MM) CONE OR PLUG WHEEL	ALUMINUM	3/8" - 24 E	3.09	14.5	3/8
25GELC-180-P3T	SIDE	18000	2" (50MM) CONE OR PLUG WHEEL	ALUMINUM	3/8" - 24 E	3.09	14.5	3/8
25GELC-180-P5T	SIDE	18000	2" (50MM) CONE OR PLUG WHEEL	ALUMINUM	5/8" - 11 E	3.31	14.9	3/8

All tools performance rated @ 90 psi / 620 kPa air pressure.
Minimum Hose I.D.: 3/8 in / 9.5 mm
Standard Equipment: Wheel guard, flange wrench, Operating instructions & service manual

500B Horizontal Series - Governed - Rotatable Exhaust Deflector

9,000 - 12,000 RPM 2.1 hp (1.6 kW)

- Rugged and durable all-steel housing
- Air motor is governor- controlled to maintain RPM under heavy load
- High output motor designed to tackle the toughest material removal jobs

MODEL	EXHAUST	FREE SPEED R/MIN	ABRASIVE CAPACITY GRINDER	TYPE HOUSING	SPINDLE SIZE	WEIGHT LB	LENGTH IN	AIR INLET SIZE IN
590BHL-P	SIDE	9000	3" CONE OR PLUG WHEEL	STEEL	5/8" - 11 E	7.5	17.9	1/2
5120BHL-P	SIDE	12000	3" CONE OR PLUG WHEEL	STEEL	5/8" - 11 E	7.5	17.9	1/2

All tools performance rated @ 90psi / 620 kPa air pressure.
Standard Equipment: Applicable wrenches, operating instructions & service manual
Minimum Hose I.D.: 5/16in / 7.9mm

236 Series - Grinder - Inline

18,000 RPM 0.9 hp (0.7 kW)

- Rugged and durable aluminum housing
- Side and rear exhaust models available

MODEL	EXHAUST	FREE SPEED R/MIN	ABRASIVE CAPACITY GRINDER	TYPE HOUSING	SPINDLE SIZE	WEIGHT LB	LENGTH IN	AIR INLET SIZE IN
236GLR-180-W3T4	REAR	18000	4" (100MM) TYPE 1	ALUMINUM	3/8" - 24 E	1.76	7.3	1/4

25 Series - Grinder - Extended

12,000 - 18,000 RPM 1.4 hp (1.0 kW)

- Powerful motor for all cut-off operations
- Governed motor with side exhaust
- Rugged and durable for any enviornment

MODEL	EXHAUST	FREE SPEED R/MIN	ABRASIVE CAPACITY GRINDER	TYPE HOUSING	SPINDLE SIZE	WEIGHT LB	LENGTH IN	AIR INLET SIZE IN
25GELC-120-W3T25	SIDE	12000	2.5" (63MM) TYPE 1	ALUMINUM	3/8" - 24 E	3.31	14.4	3/8
25GELC-120-W3T3	SIDE	12000	3" (75MM) TYPE 1	ALUMINUM	3/8" - 24 E	3.75	14.4	3/8
25GELC-140-W3T3	SIDE	14000	3" (75MM) TYPE 1	ALUMINUM	3/8" - 24 E	3.75	14.5	3/8
25GELC-180-W3T3	SIDE	18000	3" (75MM) TYPE 1	ALUMINUM	3/8" - 24 E	3.75	14.9	3/8
25GELC-120-W3T4	SIDE	12000	4" (100MM) TYPE 1	ALUMINUM	3/8" - 24 E	3.75	14.4	3/8
25GL-120-W3T4*	SIDE	12000	4" (100MM) TYPE 1	ALUMINUM	3/8" - 24 E	3.09	10.0	3/8

All tools performance rated @ 90 psi / 620 kPa air pressure.
Minimum Hose I.D.: 3/8 in / 9.5 mm
Standard Equipment: Wheel guard, flange wrench, Operating instructions & service manual
* Non-extended version

500B Series - Horizontal Grinder - Rotatable Exhaust

6,000 RPM 1.9 hp (1.4 kW)

- Safety lever or spade handle available
- Suitable for the most demanding horizontal grinding applications
- Robust and efficient design trusted for decades

MODEL	EXHAUST	FREE SPEED R/MIN	ABRASIVE CAPACITY GRINDER	TYPE HOUSING	SPINDLE SIZE	WEIGHT LB	LENGTH IN	AIR INLET SIZE IN
560BHL-16	SIDE	6000	6" X 1" (150MM X 25MM) TYPE 1	STEEL	5/8" - 11 E	10.8	18.4	1/2
560BHX-16	SIDE	6000	6" X 1" (150MM X 25MM) TYPE 1	STEEL	5/8" - 11 E	11.7	18.8	1/2

All tools performance rated @ 90 psi / 620 kPa air pressure.
Minimum Hose I.D.: 1/2 in / 12.7 mm
Standard Equipment: Wheel guard and flange wrench

1700 Series - Horizontal Grinder - Lock-Off Lever Throttle

6,000 RPM 3.1 hp (2.3 kW)

- Spade handle availability
- Safety- lock throttle lever prevents accidental start up
- High output motor designed to tackle the toughest material removal jobs

MODEL	EXHAUST	FREE SPEED R/MIN	ABRASIVE CAPACITY GRINDER	TYPE HOUSING	SPINDLE SIZE	WEIGHT LB	LENGTH IN	AIR INLET SIZE IN
1760HL-16	SIDE	6000	6" X 1" (150MM X 25MM) TYPE 1	STEEL	5/8" - 11 E	14.6	19.6	1/2

All tools performance rated @ 90 psi / 620 kPa air pressure.
Minimum Hose I.D.: 1/2 in / 12.7 mm
Standard Equipment: Wheel guard and flange wrench

1900 Series - Horizontal Grinder

6,000 RPM 4.1 hp (3.1 kW)

- Governed air motor- controlled to maintain RPM under heavy load
- High output motor designed to tackle the toughest material removal jobs
- Safety- lock throttle lever prevents accidental start up

MODEL	EXHAUST	FREE SPEED R/MIN	ABRASIVE CAPACITY GRINDER	TYPE HOUSING	SPINDLE SIZE	WEIGHT LB	LENGTH IN	AIR INLET SIZE IN
1960HG-16	SIDE	6000	6" X 1" (150MM X 25MM) TYPE 1	ALUMINUM	5/8" - 11 E	16.8	21.4	1/2
1960HL-16	REAR	6000	6" X 1" (150MM X 25MM) TYPE 1	ALUMINUM	5/8" - 11 E	16.8	21.4	1/2

All tools performance rated @ 90 psi / 620 kPa air pressure.
Minimum Hose I.D.: 1/2 in / 12.7 mm
Standard Equipment: Wheel guard and flange wrench

3060 Series - Vertical Grinder

6,000 RPM 3.0 hp (2.3 kW)

- Powerful, governed motor
- Ideally suited for the most rugged enviornments
- Maximum material removal in an ergonomic package

MODEL	EXHAUST	FREE SPEED R/MIN	ABRASIVE CAPACITY GRINDER	TYPE HOUSING	SPINDLE SIZE	WEIGHT LB	AIR INLET SIZE IN
3060AVL-06	SIDE	6000	6" (150MM) TYPE 11	ALUMINUM	5/8" - 11 E	10.1	1/2
3060AVL-07	SIDE	6000	7" (180MM) TYPE 27	ALUMINUM	5/8" - 11 E	9.7	1/2
3060AVL-09	SIDE	6000	9" (230MM) TYPE 27	ALUMINUM	5/8" - 11 E	10.4	1/2

All tools performance rated @ 90 psi / 620 kPa air pressure.
Minimum Hose I.D.: 3/4 in / 19 mm
Standard Equipment: Wheel guard, adapters, spindle wrenches, operating instructions & service manuals

4060 Series - Vertical Grinder

6,000 RPM 4.0 hp (3.1 kW)

- Maximum material removal in any application
- Powerful motor delivering ultimate torque

MODEL	EXHAUST	FREE SPEED R/MIN	ABRASIVE CAPACITY GRINDER	TYPE HOUSING	SPINDLE SIZE	WEIGHT LB	AIR INLET SIZE IN
4060AVL-06	SIDE	6000	6" (150MM) TYPE 11	ALUMINUM	5/8" - 11 E	11.7	1/2
4060AVL-07	SIDE	6000	7" (180MM) TYPE 27	ALUMINUM	5/8" - 11 E	11.0	1/2
4060AVL-09	SIDE	6000	9" (230MM) TYPE 27	ALUMINUM	5/8" - 11 E	11.9	1/2

All tools performance rated @ 90 psi / 620 kPa air pressure.
Minimum Hose I.D.: 3/4 in / 19 mm
Standard Equipment: Wheel guard, adapters, spindle wrenches, operating instructions & service manuals

Cleco Wheel Guards

PART NUMBER	WHEEL TYPE	TOOL SERIES	SIZE
202245	TYPE 1 WHEEL	236,25	4" | 100MM
202278	TYPE 1 WHEEL	236, 25	3" | 75MM
865786	TYPE 1 WHEEL	15H	3" | 75MM
865988	TYPE 1 WHEEL	15H	4" | 100MM
865993	TYPE 1 WHEEL	500BH	6" | 150MM
881608	TYPE 1 WHEEL	500BH	4" | 100MM
T50-1000430	TYPE 1 WHEEL, TYPE 27 WHEEL	C3 GRINDER	4" | 100MM
T50-1000455	TYPE 1 WHEEL, TYPE 27 WHEEL	C3 GRINDER	4 1/2" | 100MM
T50-1000467	TYPE 1 WHEEL, TYPE 27 WHEEL	C3 GRINDER	5" | 125MM
202226	TYPE 27 WHEEL	216RA, 236RA	3" | 75MM
202227	TYPE 27 WHEEL	216RA, 236RA	4" | 100MM
203142	TYPE 27 WHEEL	216RA, 236RA	5" | 125MM
203382	TYPE 27 WHEEL	236V	4" | 100MM
207751PT	TYPE 27 WHEEL	3060AVL, 4060AVL	7" | 180MM
207752PT	TYPE 27 WHEEL	3060AVL, 4060AVL	9" | 230MM
208011PT	TYPE 27 WHEEL	2260AGL	6" | 150MM
208012PT	TYPE 27 WHEEL	2260AGL	7" | 180MM
889208	TYPE 27 WHEEL	216RA, 236RA	4" | 100MM
849760	TYPE 28 WHEEL	25V	7" | 180MM
865986	TYPE 28 WHEEL	25RA	7" | 180MM
207750PT	TYPE 6 & 11 (CUP) WHEEL	3060AVL, 4060AVL	6" | 150MM
861893	TYPE 6 & 11 (CUP) WHEEL		6" | 150MM

Cleco Dotco Wheel Guards

•

PART NUMBER	WHEEL TYPE	ABRASIVE CAPACITY GRINDER	TOOL SERIES
14-5002	STATIONARY CUP WHEEL GUARDS	6”	10-53, 10-58
14-1018	TYPE 1 (CUT-OFF) WHEEL GUARDS	3” X 3/16”	12-10
14-1258	TYPE 1 (CUT-OFF) WHEEL GUARDS	3” X 3/16”	12-22, 12-27 (LP)
14-1259	TYPE 1 (CUT-OFF) WHEEL GUARDS	4” X 3/16”	12-22, 12-27 (LP)
14-2623	TYPE 1 (CUT-OFF) WHEEL GUARDS	4” X 3/16”	12-25
14-2624	TYPE 1 (CUT-OFF) WHEEL GUARDS	3” X 3/16”	12-20, 12-25
14-2097	TYPE 1 WHEEL GUARDS	3” X 1/2”	12-26
14-2551	TYPE 1 WHEEL GUARDS	3” X 1/2”	12-25
14-3011	TYPE 1 WHEEL GUARDS	3” X 1”	12-41
14-4074	TYPE 1 WHEEL GUARDS	4” X 1”	12-41
14-5012	TYPE 1 WHEEL GUARDS	6” X 1”	12-51
14-5022	TYPE 1 WHEEL GUARDS	8” X 1”	10-56
14-2123	TYPE 27 DEPRESSED CENTER WHEEL GUARDS	7”	12-42
14-2152	TYPE 27 DEPRESSED CENTER WHEEL GUARDS	5”	12-22, 12-27
14-2252	TYPE 27 DEPRESSED CENTER WHEEL GUARDS	5”	12-27
14-2562	TYPE 27 DEPRESSED CENTER WHEEL GUARDS	4”	12-22, 12-27
14-2564	TYPE 27 DEPRESSED CENTER WHEEL GUARDS	3”	12-28 (NG)
14-2593	TYPE 27 DEPRESSED CENTER WHEEL GUARDS	3”	12-22, 12-27 (LP)
14-2594	TYPE 27 DEPRESSED CENTER WHEEL GUARDS	4”	12-22, 12-27 (LP)
14-2672	TYPE 27 DEPRESSED CENTER WHEEL GUARDS	4.5”	12-27
14-5017	TYPE 27 DEPRESSED CENTER WHEEL GUARDS	9”	10-53, 10-58
14-5018	TYPE 28 DEPRESSED CENTER WHEEL GUARDS	7”	10-53, 10-58
14-5019	TYPE 28 DEPRESSED CENTER WHEEL GUARDS	9”	10-53, 10-58

Series HG Collets

- For use with Pencil Grinders

PART NUMBER	COLLET SIZE	TOOL TERMINATION	CAPACITY MAXIMUM	TOOL SERIES
01-0100	1/8 IN	-18	1/8 IN	12-03
01-0102	3/32 IN	-16	3/32 IN	12-03
01-0148	3 MM	-13	3 MM	12-03
100	1/8 IN	-08 OR -18	1/8 IN	10-04, 10-90, 12-04
102	3/32 IN	-06 OR -16	3/32 IN	10-04, 10-90
103	1/16 IN	-04 OR -14	1/16 IN	10-04, 10-90
131	2.35 MM	-02 OR -12	2.35 IN	10-04, 10-90
146	1 MM	-00 OR -10	1 MM	10-04, 10-90
148	3 MM	-03 OR -13	3 MM	10-04, 10-90, 12-04

Universal Collets

- For use with 12-05, 12-22, 12-27 grinders

MODEL	COLLET SIZE	TOOL TERMINATION	TOOL SERIES
	IN		
7808	1/4 IN	-45	12-05, 12-22, 12-27
7809	1/8 IN	-4508	12-05, 12-22, 12-27
7811	6 MM	-45M6	12-05, 12-22, 12-27
7812	3/16 IN	-4512	12-05, 12-22, 12-27
LBD3300	3 MM	-45M3	12-05, 12-22, 12-27

Termination 01 - Series 200 Collets

- Series 200 Collet

MODEL	COLLET SIZE	TOOL TERMINATION	TOOL SERIES
	IN		
204	1/8 IN	-0108	12-20, 12-25, 12-21, 12-22, 12-26, 12-27, 12-31
205	5/32 IN	-0110	12-20, 12-25, 12-21, 12-22, 12-26, 12-27, 12-31
206	3/16 IN	-0112	12-20, 12-25, 12-21, 12-22, 12-26, 12-27, 12-31
207	7/32 IN	-0114	12-20, 12-25, 12-21, 12-22, 12-26, 12-27, 12-31
208	1/4 IN	-01	12-20, 12-25, 12-21, 12-22, 12-26, 12-27, 12-31
209	9/32 IN	-0118	12-20, 12-25, 12-21, 12-22, 12-26, 12-27, 12-31
210	5/16 IN	-0120	12-20, 12-25, 12-21, 12-22, 12-26, 12-27, 12-31
212	3/8 IN	-0124	12-20, 12-25, 12-21, 12-22, 12-26, 12-27, 12-31
213	6 MM	-01M6	12-20, 12-25, 12-21, 12-22, 12-26, 12-27, 12-31
216	6 MM	-01M8	12-20, 12-25, 12-21, 12-22, 12-26, 12-27, 12-31

Series 300 Collets

- 300 Series Collets

MODEL	COLLET SIZE	TOOL TERMINATION	TOOL SERIES
	IN		
304	1/8 IN	-3608	10-95, 12-10, 12-11, 12-12, 12-20, 12-25, 12-05, 12-22, 12-27
306	3/16 IN	-3612	12-10, 12-11, 12-12, 12-20, 12-25, 12-05, 12-22, 12-27
308	1/4 IN	-36	10-95, 12-10, 12-11, 12-12, 12-20, 12-25, 12-05, 12-22, 12-27
XJG38	3/64 IN	-3603	12-10, 12-11, 12-12, 12-20, 12-25, 12-05, 12-22, 12-27
XJG44	5/64 IN	-3605	12-10, 12-11, 12-12, 12-20, 12-25, 12-05, 12-22, 12-27
XJG54	5/32 IN	-3610	12-10, 12-11, 12-12, 12-20, 12-25, 12-05, 12-22, 12-27
XJG68	6 MM	-36M6	12-10, 12-11, 12-12, 12-20, 12-25, 12-05, 12-22, 12-27

Termination 36 - Series 300 Collets

- Series 300 Collet

MODEL	COLLET SIZE	TOOL TERMINATION	TOOL SERIES
	IN		
301	3/64 IN	-3603	12-10, 12-11, 12-12, 12-20, 12-25
302	5/64 IN	-3605	12-10, 12-11, 12-12, 12-20, 12-25
303	3/32 IN	-3606	12-10, 12-11, 12-12, 12-20, 12-25
304	1/8 IN	-3608	10-95, 12-10, 12-11, 12-12, 12-20, 12-25
305	5/32 IN	-3610	12-10, 12-11, 12-12, 12-20, 12-25
306	3/16 IN	-3612	12-10, 12-11, 12-12, 12-20, 12-25
307	7/32 IN	-3612	12-10, 12-11, 12-12, 12-20, 12-25
308	1/4 IN	-36	10-95, 12-10, 12-11, 12-12, 12-20, 12-25
310	6 MM	-36M3	12-10, 12-11, 12-12, 12-20, 12-25
311	3 MM	-36M6	12-10, 12-11, 12-12, 12-20, 12-25, 12-05, 12-22, 12-27

Termination 62 - Series K Collets

- Series K Collet

MODEL	COLLET SIZE	TOOL TERMINATION	TOOL SERIES
	IN		
120	1/8 IN	-6208	10-43, 11-43
121	3/16 IN	-6212	10-43, 11-43
122	1/4 IN	-6216	10-43, 11-43
123	5/16 IN	-6220	10-43, 11-43
124	3/8 IN	-62	10-43, 11-43
125	7/16 IN	-6228	10-43, 11-43
126	1/2 IN	-6232	10-43, 11-43
127	9/16 IN	-6270	10-43, 11-43
134	8 MM	-62M8	10-43, 11-43
135	10 MM	-6270	10-43, 11-43

Spiral Cool Sanding Kits

Sanding backing Pads for Grinders

-

MODEL	DESCRIPTION	TOOL SERIES	SIZE
861655	GRINDER ACCESSORIES	25RA, 15V, 1200V, 2260AGL	7”
861792	GRINDER ACCESSORIES	216RA, 236RA, C3	5”

Type 27 & 28 Wheel Adapter Kit

Used for with Type 27 & Type 28 Wheels

-

MODEL	DESCRIPTION	TOOL SERIES
849269	GRINDER ACCESSORIES	15V, 1200V, 1700V, 1900V, 3060V, 4060V

Long Collet Guard

For us with 12-10 grinders

- Completely covers the collet
- For us with 12-10 grinders
- Limits the diameter of the cutting tool used to 5/8”

MODEL	DESCRIPTION
1020PT	LONG COLLET GUARD

Noise Suppressor Guard

For use with 12-10 front exhaust tools only

- Completely covers the collet
- For use with 12-10 front exhaust tools only
- Limits the diameter of the cuting tool used to 1/2”
- Air is exhausted at an angle

MODEL	DESCRIPTION	TOOL SERIES
14-2188	COLLET GUARD	12-10 FRONT EXHAUST

Turbine Collet Guard

For use with 10R9000 grinders

- Slips on and off tools with a slight twist

MODEL	DESCRIPTION	TOOL SERIES
14-1280	GRINDER ACCESSORIES	10-9000

Overhose for 236 Grinders

•

MODEL	DESCRIPTION
202343	HOSE CLAMP
869204	OVERHOSE ADAPTER
869580	EXHAUST OVERHOSE

Rear exhaust models only

Depressed Center Wheel Adapter

Adaptor Kit for 7” and 9” Depressed Center Wheels

- Adapt a 7/8” arbor abrassive to a 5/8”-11 threaded spindle

MODEL	DESCRIPTION
14-5008	ADAPTER AND WASHER

12LF Series - Sander - Right Angle - 300 Series Collet - Cleco Dotco

12,000 - 20,000 RPM 0.4 hp (0.29 kW)

- Composite housing
- Wide array of speeds; front and rear exhaust models available
- Ergonomic and balanced design minimized operator fatigue
- Tool not supplied with backing pad as shown

MODEL	COLLET SIZE	EXHAUST	FREE SPEED R/MIN	ABRASIVE CAPACITY GRINDER	ABRASIVE CAPACITY SANDER	TYPE HOUSING	WEIGHT LB	LENGTH IN	HEAD HEIGHT IN	AIR INLET SIZE IN
12LF200-32	1/4 IN-28I	FRONT	12000		3" (75 MM) SANDING/ POLISHING DISC	COMPOSITE	1.10	6.6	2.70	1/4
12LF201-32	1/4 IN-28I	FRONT	20000		2" (50 MM) SANDING/ POLISHING DISC	COMPOSITE	1.10	6.6	2.70	1/4
12LF280-36*	1/4 IN	REAR	12000	1/2" CARBIDE BURR, 1" MOUNTED WHEEL	3" (75 MM) SANDING/ POLISHING DISC	COMPOSITE	1.10	6.6	2.70	1/4
12LF281-36*	1/4 IN	REAR	20000	1/2" CARBIDE BURR, 1" MOUNTED WHEEL	2" (50 MM) SANDING/ POLISHING DISC	COMPOSITE	1.10	6.6	2.70	1/4
12LF201-36*	1/4 IN	FRONT	20000	1/2" CARBIDE BURR, 1" MOUNTED WHEEL	2" (50 MM) SANDING/ POLISHING DISC	COMPOSITE	1.10	6.6	2.70	1/4
12LF200-36*	1/4 IN	FRONT	12000	1/2" CARBIDE BURR, 1" MOUNTED WHEEL	3" (75 MM) SANDING/ POLISHING DISC	COMPOSITE	1.10	6.6	2.70	1/4

All tools performance rated @ 90psi / 620 kPa air pressure.
Standard Equipment: Applicable collet, collet wrenches
Minimum Hose I.D.: 1/4in / 4.8mm; * All tools performance rated @ 90 psi / 620 kPa air pressure.
Standard Equipment: Applicable collet, collet wrenches
Minimum Hose I.D.: 1/4 in / 4.8 mm

10LF Series - Sander - Right Angle - 300 Series Collet - Cleco Dotco

12,000 - 20,000 RPM 0.4 hp (0.29 kW)

- Aluminum housing for high durability
- Wide array of speeds; front and rear exhaust models available
- Ergonomic and balanced design minimized operator fatigue
- Tool not supplied with backing pad as shown

MODEL	COLLET SIZE	EXHAUST	FREE SPEED	ABRASIVE CAPACITY GRINDER	ABRASIVE CAPACITY SANDER	TYPE HOUSING	WEIGHT	LENGTH	HEAD HEIGHT	AIR INLET SIZE
			R/MIN				LB	IN	IN	IN
10LF200-32	1/4 IN-28I	FRONT	12000		3" (75 MM) SANDING/POLISHING DISC	ALUMINUM	1.10	6.6	2.90	1/4
10LF200-36	1/4 IN	FRONT	12000	1/2" CARBIDE BURR, 1" MOUNTED WHEEL	3" (75 MM) SANDING/POLISHING DISC	ALUMINUM	1.10	6.6	2.70	1/4
10LF280-36	1/4 IN	REAR	12000	1/2" CARBIDE BURR, 1" MOUNTED WHEEL	3" (75 MM) SANDING/POLISHING DISC	ALUMINUM	1.10	6.6	2.70	1/4
10LF281-36	1/4 IN	REAR	20000	1/2" CARBIDE BURR, 1" MOUNTED WHEEL	2" (50 MM) SANDING/POLISHING DISC	ALUMINUM	1.10	6.6	2.70	1/4
10LF201-36	1/4 IN	FRONT	20000	1/2" CARBIDE BURR, 1" MOUNTED WHEEL	2" (50 MM) SANDING/POLISHING DISC	ALUMINUM	1.10	6.6	2.70	1/4
10LF201-32	1/4 IN-28I	FRONT	20000		2" (50 MM) SANDING/POLISHING DISC	ALUMINUM	1.10	6.6	2.90	1/4

All tools performance rated @ 90 psi / 620 kPa air pressure.
Standard Equipment: Applicable collet, collet wrenches
Minimum Hose I.D.: 1/4 in / 4.8 mm

12-13 Series - Sander - Right Angle - Gearless - 300 Series Collet - Cleco Dotco

20,000 - 30,000 RPM 0.3 hp (0.22 kW)

- Composite housing
- Wide array of speeds offered; front and rear exhaust models available
- Suitable for a wide range of finishing and deburring applications
- Tool not supplied with backing pad as shown

MODEL	COLLET SIZE	EXHAUST	FREE SPEED	ABRASIVE CAPACITY GRINDER	ABRASIVE CAPACITY SANDER	TYPE HOUSING	WEIGHT	LENGTH	HEAD HEIGHT	AIR INLET SIZE
			R/MIN				LB	IN	IN	IN
12L1301-32	1/4 IN-28I	FRONT	25000		2" (50 MM) SANDING/POLISHING DISC	COMPOSITE	1.10	7.1	3.70	1/4
12L1300-32	1/4 IN-28I	FRONT	30000		1" (25MM) SANDING/ POLISHING DISC	COMPOSITE	1.10	7.1	3.70	1/4
12L1382-36	1/4 IN	REAR	20000	1/2" CARBIDE BURR, 1" MOUNTED WHEEL	2" (50 MM) SANDING/POLISHING DISC	COMPOSITE	1.10	7.1	3.70	1/4
12L1302-36	1/4 IN	FRONT	20000	1/2" CARBIDE BURR, 1" MOUNTED WHEEL	2" (50 MM) SANDING/POLISHING DISC	COMPOSITE	1.10	7.1	3.70	1/4
12L1381-36	1/4 IN	REAR	25000	1/2" CARBIDE BURR, 1" MOUNTED WHEEL	2" (50 MM) SANDING/POLISHING DISC	COMPOSITE	1.10	7.1	3.70	1/4
12L1300-36	1/4 IN	FRONT	30000	1/2" CARBIDE BURR, 1" MOUNTED WHEEL	1" (25MM) SANDING/ POLISHING DISC	COMPOSITE	1.10	7.1	3.70	1/4
12L1380-36	1/4 IN	REAR	30000	1/2" CARBIDE BURR, 1" MOUNTED WHEEL	1" (25MM) SANDING/ POLISHING DISC	COMPOSITE	1.10	7.1	3.70	1/4
12L1301-36	1/4 IN	FRONT	25000	1/2" CARBIDE BURR, 1" MOUNTED WHEEL	2" (50 MM) SANDING/POLISHING DISC	COMPOSITE	1.10	7.1	3.70	1/4

All tools performance rated @ 90 psi / 620 kPa air pressure.
Standard Equipment: Applicable collet, collet wrenches
Minimum Hose I.D.: 1/4 in / 4.8 mm

12-22 Series - Right Angle - Grinder/Sander - 300 Series Collet - Cleco Dotco

18,000 RPM 0.6 hp (0.45 kW)

- Ergonomic composite housing
- Heavy duty low profile head for greater accessibility
- High output motor in a lightweight package
- 3" | 75mm Extended head available

MODEL	COLLET SIZE	EXHAUST	FREE SPEED R/MIN	ABRASIVE CAPACITY GRINDER	ABRASIVE CAPACITY SANDER	TYPE HOUSING	WEIGHT LB	LENGTH IN	HEAD HEIGHT IN	AIR INLET SIZE IN
12L2277-36	1/4 IN	REAR	12000	1/2" CARBIDE BURR | 1" MOUNTED WHEEL	4" (100MM) SANDING/POLISHING DISC	COMPOSITE	2.20	10.0	2.70	1/4
12L2218-36	1/4 IN	REAR	18000	1/2" CARBIDE BURR | 1" MOUNTED WHEEL	3" (50MM) SANDING/POLISHING DISC	COMPOSITE	1.76	7.5	2.70	1/4
12L2278-36	1/4 IN	REAR	14500	1/2" CARBIDE BURR | 1" MOUNTED WHEEL	4" (100MM) SANDING/POLISHING DISC	COMPOSITE	2.20	10.0	2.70	1/4

All tools performance rated @ 90 psi / 620 kPa air pressure.
Standard Equipment: Applicable collet, collet wrenches
Minimum Hose I.D.: 5/16 in / 7.9 mm

12-22 Series - Right Angle - Grinder/Sander - Heavy Duty Head

9,000 RPM 0.6 hp (0.45 kW)

- Ergonomic composite housing
- Heavy duty low profile head for greater accessibility
- high output motor in a lightweight package
- Tool not supplied with backing pad as shown

MODEL	EXHAUST	FREE SPEED R/MIN	ABRASIVE CAPACITY SANDER	TYPE HOUSING	WEIGHT LB	LENGTH IN	HEAD HEIGHT IN	AIR INLET SIZE IN
12L2251-80	FRONT	9000	5" (125MM) SANDING/POLISHING DISC	COMPOSITE	3.31	9.3	3.90	1/4

All tools performance rated @ 90psi / 620 kPa air pressure.
Minimum Hose I.D.: 5/16in / 7.9mm
Standard Equipment: Applicable collet, collet wrenches

10-27 & 12-27 Series - Heavy Duty Head - Sander/Grinder - 5/8”-11 Threaded Spindle

3,300 - 11,000 RPM 0.9 hp (0.67 kW)

- Aluminum and Composite housing available
- high output motor for demanding sanding applications
- heavy duty low profile head for superior durability
- Tool not supplied with backing pad as shown

MODEL	EXHAUST	TERMINATION	FREE SPEED R/MIN	ABRASIVE CAPACITY SANDER	TYPE HOUSING	WEIGHT LB	LENGTH IN	HEAD HEIGHT IN	AIR INLET SIZE IN	TABLE SORT ORDER
10L2752-80	FRONT	5/8” - 11 E	11000	4” (100MM) SANDING/ POLISHING DISCS	ALUMINUM	3.31	8.6	3.90	1/4	10
12L2752-80	FRONT	5/8” - 11 E	11000	4” (102 MM) SANDING/POLISHING DISC	COMPOSITE	3.31	9.8	3.90	1/4	9
10L2760-80	FRONT	5/8” - 11 E	3300	4” (102 MM) WIRE BRUSH, 6” (152 MM) BUFFING WHEEL	ALUMINUM	3.97	9.3	3.90	1/4	1
12L2760-80	FRONT	5/8” - 11 E	3300	7” (178 MM) SANDING/POLISHING DISC	COMPOSITE	3.97	10.5	3.90	1/4	2
10L2750-80	FRONT	5/8” - 11 E	6000	7” (178 MM) SANDING/POLISHING DISC	ALUMINUM	3.09	8.5	3.90	1/4	4
12L2750-80	FRONT	5/8” - 11 E	6000	7” (178 MM) SANDING/POLISHING DISC	COMPOSITE	3.31	9.8	3.90	1/4	5
12L2761-80	FRONT	5/8” - 11 E	6000	7” (178 MM) SANDING/POLISHING DISC	COMPOSITE	3.97	10.5	3.90	1/4	6
10L2751-80	FRONT	5/8” - 11 E	9000	5” (127 MM) SANDING/POLISHING DISC	ALUMINUM	3.09	8.5	3.90	1/4	7
12L2751-80	FRONT	5/8” - 11E	9000	5” (127 MM) SANDING/POLISHING DISC	COMPOSITE	3.31	9.8	3.90	1/4	8
12L2762-80	FRONT	5/8” - 11 E	4500	7” (178 MM) SANDING/POLISHING DISC	COMPOSITE	3.97	10.5	3.90	1/4	3

All tools performance rated @ 90 psi / 620 kPa air pressure.
Minimum Hose I.D.: 5/16 in / 7.9 mm
Standard Equipment: Applicable collet, collet wrenches

Right Angle Sander

- High-performance 1.7Hp motor delivers maximum power
- Quick change spindle lock for fast and easy abrasive changes
- Quieter operation with rear exhaust overhose standard
- Ergonomic, anti-vibration handle for increased comfort and less operator fatigue
- Dual-layer, high-impact composite housing for extreme durability

MODEL	EXHAUST	FREE SPEED R/MIN	SPINDLE SIZE	WEIGHT LB	LENGTH IN	HEAD HEIGHT IN	AIR INLET SIZE IN
C3120ASDR-58OH	REAR	12000	5/8” - 11	4.05	8.95	3.03	3/8

12-12 Series - Belt Sander - Cleco Dotco

12,000 - 20,000 RPM 0.3 hp (0.22 kW)

- Grind, debur, strap polish, blend
- Choice of geared or gearless
- Ergonomic housing reduces cold air transmission to operator

MODEL	EXHAUST	FREE SPEED R/MIN	ABRASIVE CAPACITY GRINDER	TYPE HOUSING	WEIGHT LB	LENGTH IN	AIR INLET SIZE IN
12L1280-36B2	REAR	12000	1/2" W X 12" L SANDING BELT	COMPOSITE	1.32	11.3	1/4
12L1281-36B2	REAR	20000	1/2" W X 12" L SANDING BELT	COMPOSITE	1.32	11.3	1/4

All tools performance rated @ 90psi / 620 kPa air pressure.
Minimum Hose I.D.: 1/4in / 4.8mm
Standard Equipment: No.80 and No.120 grit sanding belt or one medium grit non-woven belt, applicable wrenches, grease gun, gear lube

12LF Series - Belt Sander - Cleco Dotco

12,000 - 20,000 RPM 0.3 hp (0.22 kW)

- Grind, debur, strap polish, blend
- Choice of geared or gearless
- Ergonomic housing reduces cold air transmission to operator

MODEL	EXHAUST	FREE SPEED R/MIN	ABRASIVE CAPACITY GRINDER	TYPE HOUSING	WEIGHT LB	LENGTH IN	AIR INLET SIZE IN
12LF280-36B2	REAR	12000	1/2"W X 12"L SANDING BELT	COMPOSITE	1.32	11.3	1/4
12LF281-36B2	REAR	20000	1/2"W X 12"L SANDING BELT	COMPOSITE	1.32	11.3	1/4

All tools performance rated @ 90psi / 620 kPa air pressure.
Minimum Hose I.D.: 1/4in / 4.8mm
Standard Equipment: No.80 and No.120 grit sanding belt or one medium grit non-woven belt, applicable wrenches, grease gun, gear lube

12-23 Series - Gearless - Woven or Non-Woven Sanding Belt - Cleco Dotco

20,000 RPM 0.5 hp (0.38 kW)

- Grind, debur, strap polish, blend
- Choice of geared or gearless
- Ergonomic housing reduces cold air transmission to operator

MODEL	EXHAUST	FREE SPEED R/MIN	ABRASIVE CAPACITY GRINDER	TYPE HOUSING	WEIGHT LB	LENGTH IN	AIR INLET SIZE IN
12L2384-B1	FRONT	20000	5/8" OR 3/4" W X 18" L SANDING BELT	COMPOSITE	2.43	15.0	1/4

All tools performance rated @ 90 psi / 620 kPa air pressure.
Minimum Hose I.D.: 1/4 in / 4.8 mm
Standard Equipment: No.80 and No.120 grit sanding belt or one medium grit non-woven belt, applicable wrenches, grease gun, gear lube

12-10 Series - Buffer - 200 Series Collet - Cleco Dotco

3,200 - 5,000 RPM 0.3 hp (0.22 kW)

- Ergonomic composite housing
- Parts interchangeable with numerous other Dotco products
- Lightweight and compact design with powerful geared motor

MODEL	COLLET SIZE	EXHAUST	FREE SPEED R/MIN	ABRASIVE CAPACITY GRINDER	TYPE HOUSING	SPINDLE SIZE	WEIGHT LB	LENGTH IN	AIR INLET SIZE IN
12L1092-01	1/4 IN	REAR	3200	3" (75 MM) WIRE BRUSH | 3" (75MM) BUFFING WHEEL	COMPOSITE	5/8" - 11 E	1.54	7.2	1/4
12L1093-01	1/4 IN	REAR	5000	3" (75 MM) WIRE BRUSH | 3" (75MM) BUFFING WHEEL	COMPOSITE	5/8" - 11 E	1.54	7.2	1/4

All tools performance rated @ 90 psi / 620 kPa air pressure.
Minimum Hose I.D.: 1/4 in / 6.4 mm
Standard Equipment: Applicable collet, collet wrenches

12-42 Series - External Threaded Spindle - Cleco Dotco

3,400 RPM 1.7 hp (1.27 kW)

- High output motor for the most demanding applications
- Comfortable and ergonomic composite handle
- Includes auxiliary handle for optimum operator control
- Tool not supplied with backing pad as shown

MODEL	EXHAUST	TERMINATION	FREE SPEED R/MIN	ABRASIVE CAPACITY GRINDER	TYPE HOUSING	WEIGHT LB	LENGTH IN	HEAD HEIGHT IN	AIR INLET SIZE IN
12L4203-80	SIDE	5/8" - 11 E	3400	4" (100MM) WIRE BRUSH, 8" (200MM) BUFFING WHEEL	COMPOSITE	6.4	13.6	3.90	1/2
12L4206-80	SIDE	5/8" - 11 E	6000	9"(225MM) SANDING DISC	COMPOSITE	6.4	13.6	3.90	1/2
12L4207-80	SIDE	5/8" - 11 E	7200	7" (175MM)SANDING DISC	COMPOSITE	6.4	13.6	3.90	1/2

All tools performance rated @ 90 psi / 620 kPa air pressure.
Minimum Hose I.D.: 1/2 in / 12.7 mm
Standard Equipment: Nut, washer, spacer and wrenches

Sanding Belts - Non-woven

Used on Cleco Dotco Belt Sanders

- Minimum order - 10 of any one belt

MODEL	ABRASIVE CAPACITY GRINDER 1	GRIT SIZE
14-1728	1/4" X 18"	EXTRA FINE
14-1729	1/4" X 18"	FINE
14-1730	1/4" X 18"	MEDIUM
14-1731	1/4" X 18"	COARSE
14-2327	3/4" X 18"	MEDIUM

Minimum order: 10 of any one belt

Sanding Belts - Aluminum Oxide, Resin Bond

Used on Cleco Dotco Belt Sanders

- Minimum order - 10 of any one belt

MODEL	ABRASIVE CAPACITY GRINDER 1	GRIT SIZE
14-1344	1/2" X 12"	40
14-1345	1/2" X 12"	50
14-1346	1/2" X 12"	60
14-1348	1/2" X 12"	80
14-1350	1/2" X 12"	100
14-1352	1/2" X 12"	120
14-1355	1/2" X 12"	150
14-1358	1/2" X 12"	180
14-1360	1/2" X 12"	240
14-1362	1/2" X 12"	320
14-1582	1" X 12"	60
14-1583	1" X 12"	80
14-1585	1" X 12"	120
14-1588	1" X 12"	180
14-1590	1/4" X 12"	60
14-1591	1/4" X 12"	80
14-1593	1/4" X 12"	120
14-1596	1/4" X 12"	180
14-1642	1" X 24"	60
14-1648	1" X 24"	180

Belt Sander Attachments - Cleco Dotco

Used on Cleco Dotco Belt Sanders - 12-12 and 12-13 Series

•

MODEL	DESCRIPTION	SANDING AREA IN	ABRASIVE CAPACITY GRINDER 1	TOOL SERIES	TERMINATION
14-1463	COATED ABRASIVE ATTACHMENTS	1" X 4"	1" X 12" SANDING BELT	12-12, 12-13	1/4 IN-28I
14-1473	COATED ABRASIVE ATTACHMENTS	1" X 4"	1" X 12" SANDING BELT	12-12, 12-13	300 IN
14-1603	COATED ABRASIVE ATTACHMENTS	1" X 10"	1" X 24" SANDING BELT	12-12, 12-13	1/4 IN-28I
14-1613	COATED ABRASIVE ATTACHMENTS	1" X 10"	1" X 24" SANDING BELT	12-12, 12-13	300 IN
14-1638	COATED ABRASIVE ATTACHMENTS	1/4" X 4"	1/4" X 12" SANDING BELT	12-12, 12-13	1/4 IN-28I
14-1639	COATED ABRASIVE ATTACHMENTS	1/4" X 4"	1/4" X 12" SANDING BELT	12-12, 12-13	300 IN
14-1715	NON-WOVEN ATTACHMENTS	1/2" X 6"	1/2" X 18" SANDING BELT	12-12	300 IN

Spiralcool Backing Pads

For Cleco Dotco sanders with 5/8”-11 threaded spindles. Pad contour develops draft action to cool disc and acoid excessive pick-up.

- For Cleco Dotco sanders with 5/8”-11 threaded spindles.
- Pad contour develops draft action to cool disc and acoid excessive pick-up.

MODEL	DESCRIPTION	SPEED	DIAMETER
		R/MIN	IN
14-2115	FLEXIBILITY - FLEXIBLE	10000	5
14-2116	FLEXIBILITY - MEDIUM	10000	5
14-2117	FLEXIBILITY - RIGID	10000	5
14-2197	FLEXIBILITY - FLEXIBLE	12000	4
14-2198	FLEXIBILITY - MEDIUM	12000	4
14-2199	FLEXIBILITY - RIGID	12000	4
14-2200	FLEXIBILITY - MEDIUM	7000	7
14-2201	FLEXIBILITY - RIGID	7000	7
14-2202	FLEXIBILITY - FLEXIBLE	6000	9
14-2203	FLEXIBILITY - MEDIUM	6000	9
14-2255	FLEXIBILITY - FLEXIBLE	11000	4.5
14-2256	FLEXIBILITY - MEDIUM	11000	4.5
14-2257	FLEXIBILITY - RIGID	11000	4.5
14-2529	FLEXIBILITY - FLEXIBLE	7000	7

Save-A-Disc Pads

For Cleco Dotco sanders with 5/8”-11 threaded spindles. Ribs on the backing plate cause a flexing action which throws off accumulation.

- For Cleco Dotco sanders with 5/8”-11 threaded spindles.
- Ribs on the backing plate cause a flexing action which throws off accumulation.

MODEL	DESCRIPTION	SPEED	DIAMETER
		R/MIN	IN
14-2515	PAD ASSEMBLY	7500	5
14-2517	PAD ASSEMBLY	7500	7
14-2519	PAD ASSEMBLY	7500	9
14-2521	PAD ONLY	7500	9
14-2522	PLATE ONLY	7500	5
14-2523	PLATE ONLY	7500	7
14-2525	NUT ONLY	7500	9

PSA Disc Holders

adaptor Kit for 7” and 9” Depressed Center Wheels

- For Collet Chuck - Chuck the PSA disc holder shank directly into the appropriate collet (1/8” or 1/4”)
- For Threaded Spindle - Remove the threaded shank from the PSA disc holder.
- Referring to the spindle adapter chart, select the correct spindle and thread it into the PSA holder.

MODEL	SHANK DIAMETER CAPACITY	DIAMETER	SPINDLE SIZE
		IN	
14-1105	1/4 IN	1/2	5-40 FEMALE
14-1107	1/4 IN	3/4	5-40 FEMALE
14-1110	1/4 IN	1	5-40 FEMALE
14-1111	1/4 IN	1-1/2	1/4”-20 FEMALE
14-1112	1/4 IN	2	1/4”-20 FEMALE
14-1113	1/4 IN	3	1/4”-20 FEMALE
14-1114	1/4 IN	4	1/4”-20 FEMALE
14-1146	1/8 IN	1/2	5-40 FEMALE
14-1147	1/8 IN	3/4	5-40 FEMALE
14-1170	1/8 IN	1	5-40 FEMALE

Sanding Pad Nut

For use with Cleco Dotco sanders with 5/8”-11 threaded spindles

- For use with Cleco Dotco sanders with 5/8”-11 threaded spindles

MODEL	SPINDLE SIZE
14-2118	5/8”-11 THREADED SPINDLE

Spanner Wrench

Used with 14-2118 Sanding Pad Nut

-

MODEL	SPINDLE SIZE
14-2319	5/8”-11 THREADED SPINDLE

Spindle Adapters

For use with PSA Disc holders

- For use with PSA Disc holders

MODEL	DESCRIPTION	THREAD FOR TOOL SPINDLE / PSA DISC HOLDER	MAX DISC DIAMETER
			IN
14-1142	TOOL SPINDLE THREAD / PSA DISC HOLDER THREAD	1/4”-28 MALE / 5-40 MALE	1
14-1144	TOOL SPINDLE THREAD / PSA DISC HOLDER THREAD	1/4”-28 MALE / 1/4”-20 MALE	4
14-1211	TOOL SPINDLE THREAD / PSA DISC HOLDER THREAD	5/8”-11 FEMALE / 3/8”-24 MALE	4
14-1212	TOOL SPINDLE THREAD / PSA DISC HOLDER THREAD	5/8”-11 MALE / 1/4”-20 MALE	4
14-2903	TOOL SPINDLE THREAD / PSA DISC HOLDER THREAD	5/8”-11 MALE / 5/16”-24 MALE	4

12-12 Series - Right Angle Routers

20,000 - 30,000 RPM 0.3 hp (0.22 kW)

- Available in both geared and gearless
- Multiple speed and power options available to find the right tool for the application

MODEL	EXHAUST	SHANK DIAMETER CAPACITY	FREE SPEED	DRIVE	WEIGHT	LENGTH	AIR INLET SIZE
		IN	R/MIN		LB	IN	IN
12L1201-36RT	FRONT	1/4 IN	20000	GEARED 0.3 HP (0.22 KW)	1.76	6.5	1/4
12L1281-36RT	REAR	1/4 IN	20000	GEARED 0.3 HP (0.22 KW)	1.76	6.5	1/4
12L1300-36RT	FRONT	1/4 IN	30000	GEARLESS 0.3 HP (0.22 KW)	1.54	7.4	1/4
12L1380-36RT	REAR	1/4 IN	30000	GEARLESS 0.3 HP (0.22 KW)	1.54	7.4	1/4
12L1381-36RT	REAR	1/4 IN	25000	GEARLESS 0.3 HP (0.22 KW)	1.54	7.4	1/4

All tools performance rated @ 90psi / 620 kPa air pressure

Minimum hose I.D.: 1/4in | 6.4 mm

Stadnard Equipment: Collet, applicable wrenches

10-10 & 12-10 Series - Inline Router

30,000 - 34,000 RPM 0.3 hp (0.22 kW)

- Tremendous power for the toughest portable routing operations
- Unique governor design assures minimum air consumption, maximum power all at correct speed and long motor life
- All models oil free

MODEL	EXHAUST	SHANK DIAMETER CAPACITY	FREE SPEED	TYPE HOUSING	WEIGHT	LENGTH	AIR INLET SIZE
		IN	R/MIN		LB	IN	IN
10L1000-36RT	FRONT	1/4 IN	30000	ALUMINUM	1.32	6.7	1/4
12L1000-36RT	FRONT	1/4 IN	30000	COMPOSITE	1.32	6.7	1/4
12L1001-36RT	FRONT	1/4 IN	34000	COMPOSITE	1.32	6.7	1/4

All tools performance rated @ 90psi / 620 kPa air pressure.
Minimum Hose I.D.: 1/4in / 6.4mm
Standard Equipment: Collet, applicable wrenches

10-20 & 12-20 Series - Inline Router

20,000 - 25,000 RPM 0.6 hp (0.45 kW)

- Tremendous power for the toughest portable routing operations
- Unique governor design assures minimum air consumption, maximum power at correct speed and long motor life

MODEL	EXHAUST	SHANK DIAMETER CAPACITY	FREE SPEED	TYPE HOUSING	WEIGHT	LENGTH	AIR INLET SIZE
		IN	R/MIN		LB	IN	IN
12L2001-01RT	FRONT	1/4 IN	20000	COMPOSITE	1.98	7.5	1/4
10L2000-01RT	FRONT	1/4 IN	25000	ALUMINUM	1.76	0.63	1/4
12L2000-01RT	FRONT	1/4 IN	25000	COMPOSITE	1.98	7.5	1/4
12L2080-01RT	REAR	1/4 IN	25000	COMPOSITE	1.98	7.5	1/4
12L2081-01RT	REAR	1/4 IN	20000	COMPOSITE	1.98	7.5	1/4

All tools performance rated @ 90psi / 620 kPa air pressure.
Minimum Hose I.D.: 5/16in / 7.9mm
Standard Equipment: Collet, applicable wrenches

10-25 & 12-25 Series - Inline Router

18,000 - 23,000 RPM 0.9 hp (0.67 kW)

- Sustained power for any routing application
- Composite comfortable grip
- Roll value for easy operation

MODEL	EXHAUST	SHANK DIAMETER CAPACITY	FREE SPEED	TYPE HOUSING	WEIGHT	LENGTH	AIR INLET SIZE
		IN	R/MIN		LB	IN	IN
12L2502-01RT	FRONT	1/4 IN	18000	COMPOSITE	2.65	7.1	1/4
12L2582-0124RT	REAR	3/8 IN	18000	COMPOSITE	2.65	7.1	1/4
10L2500-01RT	FRONT	1/4 IN	23000	ALUMINUM	2.43	6.9	1/4
10L2580-01RT	REAR	1/4 IN	23000	ALUMINUM	2.43	6.9	1/4
12L2500-01RT	FRONT	1/4 IN	23000	COMPOSITE	2.65	7.1	1/4
12L2580-0124RT	REAR	3/8 IN	23000	COMPOSITE	2.65	7.1	1/4
12L2580-01RT	REAR	1/4 IN	23000	COMPOSITE	2.65	7.1	1/4
12L2582-01RT	REAR	1/4 IN	18000	COMPOSITE	2.65	7.1	1/4

All tools performance rated @ 90psi / 620 kPa air pressure.
Minimum Hose I.D.: 5/16in / 7.9mm
Standard Equipment: Collet, applicable wrenches

10-40 & 12-40 Series - Inline Router

18,000 RPM 1.7 hp (1.27 kW)

- Maximum power for larger routing application
- Tremendous power for the toughest portable routing operations
- Unique governor design assures minimum air consumption, maximum power at correct speed and long motor life
- All models oil free

MODEL	EXHAUST	SHANK DIAMETER CAPACITY	FREE SPEED	TYPE HOUSING	WEIGHT	LENGTH	AIR INLET SIZE
		IN	R/MIN		LB	IN	IN
10L4018-01	FRONT	1/4 IN	18000	ALUMINUM	4.19	11.3	1/2
12L4018-01	FRONT	1/4 IN	18000	COMPOSITE	4.19	11.3	1/2
12L4018-03	FRONT	3/8 IN	18000	COMPOSITE	4.19	11.3	1/2

All tools performance rated @ 90psi / 620 kPa air pressure.
Minimum Hose I.D.: 1/2in / 12.7mm
Standard Equipment: Collet, applicable wrenches

10-43 Series - Base Mount Router

9,000 - 18,000 RPM 1.7 hp (1.27 kW)

- Roll valve gives easy, convenient operation
- Cool running pneumatic motor - Stays cool even under heavy load
- Easy-to-use thumb throttle can be operated without releaseing hand from handel
- Smooth accurate cuts - assured by precision spindle

MODEL	EXHAUST	SHANK DIAMETER CAPACITY	FREE SPEED	TYPE HOUSING	WEIGHT	LENGTH	AIR INLET SIZE
		IN	R/MIN		LB	IN	IN
10T4316-62	SIDE	1/2 IN	16000	ALUMINUM	7.5	7.1	1/2
10T4309-62	SIDE	1/2 IN	9000	ALUMINUM	7.5	7.1	1/2
10T4318-62	SIDE	1/2 IN	18000	ALUMINUM	7.5	7.1	1/2

All tools performance rated @ 90psi / 620 kPa air pressure.
Minimum Hose I.D.: 1/2in / 12.7mm
Standard Equipment: Collet, applicable wrenches

11-43 Series - Mountable Power Unit

18,000 RPM 1.7 hp (1.27 kW)

- Cool running pneumatic motor stays cool even under heavy load
- Flat top provides firm setting for changing cutters and making adjustments
- Smooth accurate cuts - assured by precision spindle

MODEL	EXHAUST	SHANK DIAMETER CAPACITY	FREE SPEED	TYPE HOUSING	WEIGHT	LENGTH	AIR INLET SIZE
		IN	R/MIN		LB	IN	IN
11T4316-62		1/2 IN	16000	ALUMINUM	5.5	7.1	1/2
11T4309-62	SIDE	1/2 IN	9000	ALUMINUM	5.5	7.1	1/2
11T4318-62	SIDE	1/2 IN	18000	ALUMINUM	5.5	7.1	1/2

All tools performance rated @ 90psi / 620 kPa air pressure.
Minimum Hose I.D.: 1/2in / 12.7mm
Standard Equipment: Collet, applicable wrenches

Router Assemblies - Cleco Dotco

For use with Dotco 12-10, 12-20 and 12-25 series

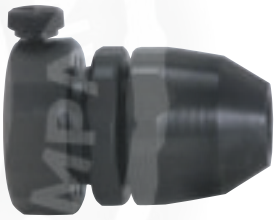

- For use with Dotco 12-10, 12-20 and 12-25 series

MODEL	DESCRIPTION	SHANK DIAMETER CAPACITY	TOOL SERIES
14-1180	ROUTER HOUSING	1/4 IN	12-10
14-2080	ROUTER HOUSING	3/8 IN	12-20, 12-25
14-2082	LOCK NUT	3/8 IN	12-20, 12-25
14-2176	NOSE HOUSING	1/4 IN	12-20, 12-25
14-2180	COMPLETE ATTACHMENT	1/4 IN	12-20, 12-25
14-2187	COMPLETE ATTACHMENT	1/4 IN	12-10
14-2426	NOSE HOUSING	3/8 IN	12-20, 12-25
14-2429	COMPLETE ATTACHMENT	3/8 IN	12-20, 12-25

Router Guides For Router Bits with 3/8” Shanks

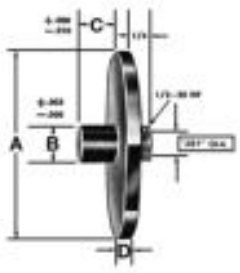

- For use on Dotco 12-10, 12-20, 12-20, 12-25 and 12-40 series.
- The minimum router bit length (OAL) to be used is determined by the formula: OAL = 1-13/16”+C+P (series 12-10); OAL = 2”+C+P (series 12-20 & 12-25). “C” is the “C” dimension of the router guide and “P” is the desired protrusion of the router bit.
- Important: Insert bit into collet as far as possible, then pull out 1/16” and tighten collet.
- In an emergency, if it is necessary to pull out the bit more than 1/4”, be sure to insert a short length of blank shank (not to exceed 5/8” long) in the bottom of the collet before inserting the bit.

MODEL	DESCRIPTION	DIMENSION A	DIMENSION B	DIMENSION C	DIMENSION D
		IN	IN	IN	IN
14-2240	FOR ROUTER BITS WITH 3/8” SHANKS	2-1/2	3/8	3/8	1/8
14-2243	FOR ROUTER BITS WITH 3/8” SHANKS	2-1/2	5/8	3/8	1/8
14-2531	FOR ROUTER BITS WITH 3/8” SHANKS	1-1/2	1/2	3/8	1/8
14-2538	FOR ROUTER BITS WITH 3/8” SHANKS	1-1/2	1/2	1/2	1/8
14-2539	FOR ROUTER BITS WITH 3/8” SHANKS	1-1/2	1/2	5/8	1/8
14-2540	FOR ROUTER BITS WITH 3/8” SHANKS	1-1/2	9/16	3/8	1/8
14-2541	FOR ROUTER BITS WITH 3/8” SHANKS	1-1/2	9/16	1/2	1/8
14-2542	FOR ROUTER BITS WITH 3/8” SHANKS	1-1/2	9/16	5/8	1/8
14-2544	FOR ROUTER BITS WITH 3/8” SHANKS	1-1/2	5/8	5/8	1/8
14-2630	FOR ROUTER BITS WITH 3/8” SHANKS	2-1/2	9/16	1/2	1/8
14-2631	FOR ROUTER BITS WITH 3/8” SHANKS	2-1/2	5/8	5/8	1/8
14-2632	FOR ROUTER BITS WITH 3/8” SHANKS	2-1/2	1/2	1/2	1/8
14-2633	FOR ROUTER BITS WITH 3/8” SHANKS	2-1/2	1/2	5/8	1/8
14-2634	FOR ROUTER BITS WITH 3/8” SHANKS	2-1/2	9/16	3/8	1/8
14-2635	FOR ROUTER BITS WITH 3/8” SHANKS	2-1/2	9/16	5/8	1/8
14-2636	FOR ROUTER BITS WITH 3/8” SHANKS	2-1/2	5/8	1/2	1/8
14-2893	FOR ROUTER BITS WITH 3/8” SHANKS	1-1/2	5/8	3/8	1/8
14-2925	FOR ROUTER BITS WITH 3/8” SHANKS	1-1/2	5/8	1/2	1/8

Router Guides For Router Bits with 1/4” Shanks

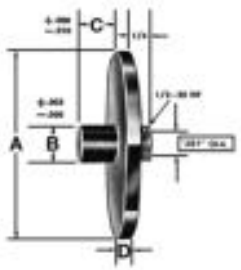

- For use on Dotco 12-10, 12-20, 12-20, 12-25 and 12-40 series.
- The minimum router bit length (OAL) to be used is determined by the formula: OAL = 1-13/16”+C+P (series 12-10); OAL = 2”+C+P (series 12-20 & 12-25). “C” is the “C” dimension of the router guide and “P” is the desired protrusion of the router bit.
- Important: Insert bit into collet as far as possible, then pull out 1/16” and tighten collet.
- In an emergency, if it is necessary to pull out the bit more than 1/4”, be sure to insert a short length of blank shank (not to exceed 5/8” long) in the bottom of the collet before inserting the bit.

MODEL	DESCRIPTION	DIMENSION A	DIMENSION B	DIMENSION C	DIMENSION D
		IN	IN	IN	IN
14-2400	FOR ROUTER BITS WITH 1/4” SHANKS	1	3/8	1/8	1/8
14-2401	FOR ROUTER BITS WITH 1/4” SHANKS	1	3/8	1/4	1/8
14-2402	FOR ROUTER BITS WITH 1/4” SHANKS	1	3/8	3/8	1/8
14-2406	FOR ROUTER BITS WITH 1/4” SHANKS	1	7/16	1/8	1/8
14-2407	FOR ROUTER BITS WITH 1/4” SHANKS	1	7/16	1/4	1/8
14-2408	FOR ROUTER BITS WITH 1/4” SHANKS	1	7/16	3/8	1/8
14-2411	FOR ROUTER BITS WITH 1/4” SHANKS	1	1/2	1/4	1/8
14-2412	FOR ROUTER BITS WITH 1/4” SHANKS	1	1/2	1/2	1/8
14-2413	FOR ROUTER BITS WITH 1/4” SHANKS	1	1/2	5/8	1/8
14-2414	FOR ROUTER BITS WITH 1/4” SHANKS	1	1/2	3/4	1/8
14-2417	FOR ROUTER BITS WITH 1/4” SHANKS	1	9/16	1/8	1/8
14-2420	FOR ROUTER BITS WITH 1/4” SHANKS	1	5/8	1/8	1/8
14-2421	FOR ROUTER BITS WITH 1/4” SHANKS	1	5/8	5/8	1/8
14-2500	FOR ROUTER BITS WITH 1/4” SHANKS	1-1/2	3/8	1/8	1/8
14-2501	FOR ROUTER BITS WITH 1/4” SHANKS	1-1/2	3/8	1/4	1/8
14-2502	FOR ROUTER BITS WITH 1/4” SHANKS	1-1/2	3/8	3/8	1/8
14-2505	FOR ROUTER BITS WITH 1/4” SHANKS	1-1/2	7/16	1/8	1/8
14-2506	FOR ROUTER BITS WITH 1/4” SHANKS	1-1/2	7/16	1/4	1/8
14-2507	FOR ROUTER BITS WITH 1/4” SHANKS	1-1/2	7/16	3/8	1/8
14-2510	FOR ROUTER BITS WITH 1/4” SHANKS	1-1/2	1/2	1/4	1/8
14-2511	FOR ROUTER BITS WITH 1/4” SHANKS	1-1/2	1/2	3/8	1/8
14-2512	FOR ROUTER BITS WITH 1/4” SHANKS	1-1/2	1/2	1/2	1/8
14-2600	FOR ROUTER BITS WITH 1/4” SHANKS	2-1/2	1/2	1/2	3/16
14-2703	FOR ROUTER BITS WITH 1/4” SHANKS	3/4	3/8	1/2	1/8

10-43 Series Router Template Guides

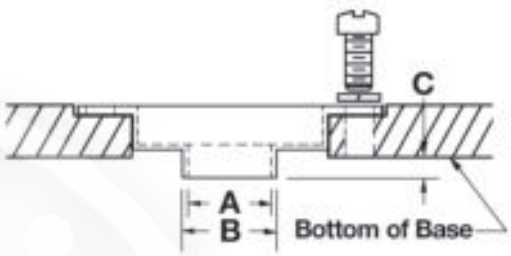

MODEL	DESCRIPTION	FOR USE WITH ROUTER BITS UP TO:	DIMENSION A	DIMENSION B	DIMENSION C
			IN	IN	IN
14-4019	ROUTER ACCESSORIES	1/4	5/16	3/8	3/16
14-4020	ROUTER ACCESSORIES	5/16	3/8	7/16	5/16
14-4021	ROUTER ACCESSORIES	1/2	9/16	5/8	3/16

Rivet Trimmer Attachment

For use on Dotco 12-12 series front or rear exhaust collet models.

- For use on Cleco Dotco 12-12 series front or rear exhaust collet models.
- Trims “pop” or “blind” rivets up to 3/16” diameter, also suitable for shaving small welds.
- Micrometer adjustment controls height of cut to .001”.
- Runner pads minimize scratching of the work surface.

MODEL	DESCRIPTION	SHANK DIAMETER CAPACITY	RECOMMENDED USE	DIAMETER	LENGTH	
				IN	IN	MM
14-1332	CUTTERS - CYLINDRICAL, CARBIDE	1/4 IN	SHAVING WELDS	1/2	1.88	47.625
14-1723	TRIMMER					
14-1732	CUTTERS - INVERTED CONE, CARBIDE	1/4 IN	STEEL RIVETS	3/4	1.88	47.625

Two Handed Router Base

Easy depth adjustment. Can also be used with 10-43 template guides.

- Two handed control for router applications.
- Easy depth adjustment. Can also be used with 10-43 template guides.
- Cutters: 14-2442 (combination flush/bevel 22°)

MODEL	DESCRIPTION	TOOL SERIES
14-1577	USE WITH FRONT OR REAR EXHAUST COLLET MODELS	12-10
14-2577	USE WITH FRONT OR REAR EXHAUST COLLET MODELS	12-20, 12-25

Laminate Trimmer Attachment

Used on Dcleco Dotco 12-10, 12-10 and 12-25 Series Routers

-

MODEL	DESCRIPTION	TOOL SERIES
14-1178	ROUTER ACCESSORIES	12-10
14-2178	ROUTER ACCESSORIES	12-20, 12-25

12-22 Series - Right Angle - Oscillating Saw

14,000 RPM 0.6 hp (0.45 kW)

- Available in right angle or inline
- Excellent control and high productivity with minimum fatigue
- Easy to change blades
- Adjustable depth control

MODEL	SAW BLADE CAPACITY		FREE SPEED	CONFIGURATION	TYPE HOUSING	MAXIMUM DEPTH OF CUT		WEIGHT	LENGTH	AIR INLET SIZE	EXHAUST
	IN	MM	R/MIN			IN	MM	LB	IN	IN	
12L2065-90	2.50	63.5	14000	INLINE	COMPOSITE	0.56	14.3	2.20	8.9	1/4	REAR
12L2240-90	2.50	63.5	14000	RIGHT ANGLE	COMPOSITE	0.56	14.3	2.20	10.9	1/4	REAR

All tools performance rated @ 90psi / 620 kPa air pressure.
Minimum Hose I.D.: 5/16in / 7.9mm
Standard Equipment: Applicable wrenches, oilless blades

12-12 Series - Saw

2,400 - 20,000 RPM 0.3 hp (0.22 kW)

- Vacuum ready
- Compact and easy to use
- Easy to change blades
- Adjustable depth control

MODEL	SAW BLADE CAPACITY		FREE SPEED	TYPE HOUSING	MAXIMUM DEPTH OF CUT		WEIGHT	LENGTH	AIR INLET SIZE	EXHAUST
	IN	MM	R/MIN		IN	MM	LB	IN	IN	
12S1206-02	2.01	51	12000	COMPOSITE	0.43	11	1.32	7.1	1/4	FRONT
12S1273-03	2.01	51	12000	COMPOSITE	0.43	11	2.20	7.1	1/4	VACUUM READY
12S1282-02	2.01	51	12000	COMPOSITE	0.43	11	1.32	7.1	1/4	REAR
12S1207-02	2.01	51	20000	COMPOSITE	0.43	11	1.32	7.1	1/4	FRONT
12S1274-03	2.01	51	20000	COMPOSITE	0.43	11	2.20	7.1	1/4	VACUUM READY
12S1283-02	2.01	51	20000	COMPOSITE	0.43	11	1.32	7.1	1/4	REAR
12S1288-02	2.01	51	2400	COMPOSITE	0.43	11	1.54	8.9	1/4	REAR
12S1289-02	2.01	51	3600	COMPOSITE	0.43	11	1.54	8.9	1/4	REAR

All tools performance rated @ 90psi / 620 kPa air pressure.
Minimum Hose I.D.: 1/4in / 6.4mm
Standard Equipment: Applicable wrenches, oilless blades

12-27 Series - Saw

430 - 11,000 RPM 0.9 hp (0.67 kW)

- Compact and easy to use
- Excellent control and high productivity with minimum fatigue
- Easy to change blades

MODEL	SAW BLADE CAPACITY		FREE SPEED	TYPE HOUSING	MAXIMUM DEPTH OF CUT		WEIGHT	LENGTH	AIR INLET SIZE	EXHAUST
	IN	MM	R/MIN		IN	MM	LB	IN	IN	
12S2749-01	3.39	86	11000	COMPOSITE	1.00	25.4	4.9	11.4	1/4	FRONT
12S2793-02	4.02	102	3200	COMPOSITE	1.00	25.4	5.3	14.5	1/4	REAR
12S2790-02	4.02	102	430	COMPOSITE	1.00	25.4	6.2	16.2	1/4	REAR
12S2774-02	3.39	86	7000	COMPOSITE	1.00	25.4	6.4	14.1	1/4	VACUUM READY
12S2775-01	4.02	102	8500	COMPOSITE	1.00	25.4	7.3	14.1	1/4	VACUUM READY
12S2748-01	4.02	102	9000	COMPOSITE	1.00	25.4	4.9	11.4	1/4	FRONT
12S2792-02	3.39	86	940	COMPOSITE	1.00	25.4	6.2	16.2	1/4	REAR
12S2794-01	2.52	64	4700	COMPOSITE	0.56	14.3	4.63	13.2	1/4	REAR

All tools performance rated @ 90psi / 620 kPa air pressure.
Minimum Hose I.D.: 5/16in / 7.9mm
Standard Equipment: Applicable wrenches, oilless blades, 3/4in Arbor adapter

12-42 Series - Saw

5,800 - 8,600 RPM 1.7 hp (1.27 kW)

- Adjustable depth control
- Easy to change blades
- Compact and easy to use

MODEL	SAW BLADE CAPACITY		FREE SPEED	TYPE HOUSING	MAXIMUM DEPTH OF CUT		WEIGHT	LENGTH	AIR INLET SIZE	EXHAUST
	IN	MM	R/MIN		IN	MM	LB	IN	IN	
12S4216-01	4.02	102	5800	COMPOSITE	1.00	25.4	7.9	15.5	1/4	FRONT
12S4218-01	4.02	102	8600	COMPOSITE	1.00	25.4	7.9	15.5	1/4	FRONT
12S4225-03	4.02	102	8500	COMPOSITE	1.00	25.4	9.3	17.0	1/4	VACUUM READY

All tools performance rated @ 90psi / 620 kPa air pressure.
Minimum Hose I.D.: 1/2in / 12.7mm
Standard Equipment: Applicable wrenches, oilless blades, 3/4in Arbor adapter

Saw Blades - 1/4” arbor hole

Used on Cleco Dotco Saw’s

- Used for sawing non-metallic materials

MODEL	DESCRIPTION	MAXIMUM DEPTH OF CUT	SPEED	DIAMETER	RECOMMENDED USE
		IN	R/MIN	IN	(GUIDELINES ONLY)
14-0930	HIGH SPEED STEEL 44 TEETH	3/32” X 1/16”	12000	1-1/4	FIBERGLASS, RUBBER
14-1395*	CARBIDE CHIP 36/80 GRIT	7/16” X 3/32”	20000	2	FIBERGLASS, RUBBER
14-1396*	CARBIDE CHIP 36/80 GRIT	7/32” X 3/32”	20000	1-1/2	FIBERGLASS, RUBBER
14-1398*	DIAMOND CHIP 40/60 GRIT	7/32” X 5/64”	20000	1-1/2	ALUMINUM, LAMINATED PLASTICS, PRESSED BOARD, WOOD
14-1400*	DIAMOND CHIP 40/60 GRIT	7/16” X 5/64”	20000	2	FIBERGLASS, RUBBER
14-1875	HIGH SPEED STEEL 22 TEETH	3/32” X 1/16”	12000	1-1/4	ALUMINUM, LAMINATED PLASTICS, PRESSED BOARD, WOOD
14-1890	HIGH SPEED STEEL 22 TEETH	7/16” X 1/16”	12000	2	ALUMINUM, LAMINATED PLASTICS, PRESSED BOARD, WOOD
14-1891	HIGH SPEED STEEL 44 TEETH	7/16” X 1/16”	12000	2	ALUMINUM, LAMINATED PLASTICS, PRESSED BOARD, WOOD
14-1892	HIGH SPEED STEEL 60 TEETH	7/16” X 1/16”	12000	2	ALUMINUM, LAMINATED PLASTICS, PRESSED BOARD, WOOD
14-1895	HIGH SPEED STEEL 22 TEETH	7/32” X 1/16”	12000	1-1/2	ALUMINUM, LAMINATED PLASTICS, PRESSED BOARD, WOOD

Note; * CAUTION: Use only for sawing non-metallic materials

Saw Blades - 7/16” arbor hole

Used on Cleco Dotco Saw’s

- Used for sawing non-metallic materials

MODEL	DESCRIPTION	MAXIMUM DEPTH OF CUT	TOOL SERIES	DIAMETER	RECOMMENDED USE
		IN		IN	(GUIDELINES ONLY)
14-1887	HIGH SPEED STEEL 22 TEETH	7/16” X 1/16”	12S1288-04	2	ALUMINUM, LAMINATED PLASTICS, PRESSED BOARD, WOOD
14-1888	HIGH SPEED STEEL 44 TEETH	7/16” X 1/16”	12S1288-04	2	ALUMINUM, LAMINATED PLASTICS, PRESSED BOARD, WOOD
14-1889	HIGH SPEED STEEL 60 TEETH	7/16” X 1/16”	12S1288-04	2	ALUMINUM, LAMINATED PLASTICS, PRESSED BOARD, WOOD
14-2146	HIGH SPEED STEEL 80 TEETH	9/16	12S2793-01	2-1/2	16 GAUGE STEEL
14-2147	HIGH SPEED STEEL 44 TEETH	9/16	12S2794-01	2-1/2	1/4” ALUMINUM, 1/2” PLYWOOD, 1/2” PHENOLIC
14-2928	HIGH SPEED STEEL 60 TEETH	15/16”	12S2794-02	3-3/8	1/4” ALUMINUM, 1/2” PLYWOOD, 1/2” PHENOLIC
14-2929	HIGH SPEED STEEL 80 TEETH	15/16”	12S2792-02	3-3/8	20 GAUGE STEEL, PANELING, PLYWOOD

Saw Blades - 3/4” arbor hole

Used on Cleco Dotco Saw’s

- Used for sawing non-metallic materials

MODEL	DESCRIPTION	MAXIMUM DEPTH OF CUT	DIAMETER	RECOMMENDED USE
		IN	IN	(GUIDELINES ONLY)
14-2690	DIAMOND CHIP 60/80 GRIT	1” X 5/64”	4	FIBERGLASS, COMPOSITE, CARBON FIBER
14-2694*	CARBIDE CHIP 36 GRIT	1” X 11/64”	4	HARD RUBBER
14-2697*	CARBIDE CHIP 80 GRIT	1” X 1/8”	4	FIBERGLASS
14-2699*	CARBIDE TIP 20 TEETH	1” X 7/64”	4	THIN FIBERGLASS, PLASTIC LAMINATES TO 1/8” THICK
14-2700*	CARBIDE TIP 20 TEETH	1” X 7/64”	4	THICKER FIBERGLASS, PLASTIC LAMINATES TO 1/2” THICK
14-2701*	CARBIDE CHIP 36/80 GRIT	1” X 1/8”	4	FIBERGLASS, HARD RUBBER
14-2710	CARBIDE TIP 20 TEETH	1” X 7/64”	4	THIN NON-FERROUS MATERIAL (TO APPROX . 1/8” THICK)
14-2711	CARBIDE TIP 12 TEETH	1” X 7/64”	4	THICKER NON-FERROUS MATERIAL (TO APPROX . 1/2” THICK)

Note; * *CAUTION: These carbide chip and tip and diamond blades are not to be used on metallic materials.
**Slim blade for easy cutting of fiberglass, with minimum dust -36 grit on periphery and 80 grit on the sides.

Saw Blades - oscillating saws with 3/8” arbor hole

Used on Cleco Dotco Oscillating Saw

- Used on 12-22 Series

MODEL	DESCRIPTION	MAXIMUM DEPTH OF CUT	DIAMETER	RECOMMENDED USE
		IN	IN	(GUIDELINES ONLY)
14-1740*	CARBIDE CHIP 36/80 GRIT	7/16” X 3/32”	2	FIBERGLASS
14-1741*	DIAMOND CHIP 40/60 GRIT	7/16” X 5/64”	2	FIBERGLASS, CARBON COMPOSITES
14-1742	STAINLESS STEEL 124 TEETH	9/16” X 3/64”	2-1/2	WOOD, UNCURED OR CURED COMPOSITES, ALUMINUM, PLASTIC
14-1743	CARBIDE 120 TEETH	9/16” X 1/16”	2-1/2	CURED GRAPHIC COMPOSITES
14-1744	RAZOR	9/16” X 3/64”	2-1/2	CARDBOARD, LIGHT PLASTIC
14-1745	STAINLESS STEEL 120 TEETH	9/16” X 3/64”	2-1/2	CONFINED SPACE
14-1746	FLUSH STAINLESS 124 TEETH	9/16” X 3/64”	2-1/2	WOOD, UNCURED OR CURED COMPOSITES, ALUMINUM, PLASTIC
14-1747	RAZOR	9/16” X 3/64”	3	CARDBOARD, LIGHT PLASTIC

Use only for sawing non-metallic materials. Note:

Vacuum Conversion Kits 12-27 series

Converts front exhaust to a one of the configurations shown below

- Refer to the Vacuum Ready 12-27 Models in the catalog

MODEL	DESCRIPTION	TOOL SERIES
2704	OPTION 1 - PORTA BAG	12-27
2705	OPTION 2 - FLOOR BAG	12-27
2729	OPTION 3 - VACUUM SYSTEM ADAPTER	12-27

To convert an existing Cleco Dotco front exhaust series 12-27 saw to Vacuum operation, order any of the conversion kits listed in the table. NOTE: When converting to vacuum, free speed of the tool will be reduced 20%.

Vacuum Conversion Kits 12-42 series

Converts front exhaust to a one of the configurations shown below

- Refer to the Vacuum Ready 12-42 Models in the catalog

MODEL	DESCRIPTION	TOOL SERIES
4131	OPTION 1 - PORTA BAG	12-42
4132	OPTION 2 - FLOOR BAG	12-42
4133	OPTION 3 - VACUUM SYSTEM ADAPTER	12-42

To convert an existing Cleco Dotco front exhaust series 12-42 saw to Vacuum operation, order any of the conversion kits listed in the table. NOTE: When converting to vacuum, free speed of the tool will be reduced 20%.

SC3A Series - Triple Scaler

Piston Type

- Piston Type
- For maximum material removal
- Heavy duty, rugged application

MODEL	BORE	STROKE	BLOWS PER MINUTE	AIR INLET SIZE	LENGTH	WEIGHT	AIR INLET SIZE
	IN	IN		IN	IN	LB	IN
SC3A	0.88	0.81	5200	3/8	13.3	7.9	3/8

All tools performance rated @ 90psi / 620 kPa air pressure.
Minimum Hose I.D.: 3/8in / 9.6mm
Standard Equipment: Operating instructions & service manual

B1 Series - Lever Start - Needle Scaler

Built-in Chisel Retainer

- Built-in Chisel Retainer
- Front Exhaust
- Lever Start
- Needle Type

MODEL	BORE	STROKE	ABRASIVE CAPACITY	BLOWS PER MINUTE	AIR INLET SIZE	LENGTH	WEIGHT	RETAINER TYPE	AIR INLET SIZE
	IN	IN			IN	IN	LB		IN
B1-CNB-LT-RD	1	1.1	5" | 125 MM NEEDLES STANDARD, 7" | 180 MM NEEDLES OPTIONAL	4600	1/4	15.0	6.4	PIN	1/4

All tools performance rated @ 90psi / 620 kPa air pressure.
Minimum Hose I.D.: 5/16in / 7.9mm
Standard Equipment: Operating instructions & service manual

MP5187 - Lightweight Needle Scaler

Almost half the weight of standard models with similar BPM

- 4200 Blows per minute
- Compact design for work in close quarters
- Almost half the weight of standard models with similar BPM
- Precision heat treated needles for maximum performance

MODEL	BORE	STROKE	BLOWS PER MINUTE	AIR INLET SIZE	LENGTH	WEIGHT	AIR INLET SIZE
	IN	IN		IN	IN	LB	IN
MP5187	0.79	0.59	4200	1/4	8.9	2.5	1/4

General: Air Inlet 1/4" NPT Use 1/4" (9.6mm) I.D. Hose All tools performance rated @ 90psi (620 kPa) air pressure. Standard Equipment: MP5187: 12 needles, 1/8" (3mm) dia., 5" (125mm) long. Owners Manual, Parts sheet. Optional Equipment: MP5187: 8913300: 3mm x 7" carbon steel flat tip needle kit (12). 80074300: 3mm x 7" chisel tip needles. 71010300: (12) 3mm x 5" with 3mm needle holder

B1 Series - Lever Start - Needle Scaler Kit

Kit Includes B1-CNB-LT-RD scaler, whip hose, extra set of needles, two chisels, extra chisel retainer, retainer parts and metal case.

- Kit Includes B1-CNB-LT-RD scaler, whip hose, extra set of needles, two chisels, extra chisel retainer, retainer parts and metal case.

MODEL	BORE	STROKE	ABRASIVE CAPACITY	BLOWS PER MINUTE	LENGTH	WEIGHT	RETAINER TYPE
	IN	IN			IN	LB	
B1-CNB-LT-RD-K	0.04	1.1	5" | 125 MM NEEDLES STANDARD, 7" | 180 MM NEEDLES OPTIONAL	4600	15.0	6.4	BUILT-IN

All tools performance rated @ 90psi / 620 kPa air pressure.
Minimum Hose I.D.: 5/16in / 7.9mm
Standard Equipment: Operating instructions & service manual

B1 Series - Push-Pull Start - Chisel Scaler

Built-in Chisel Retainer

- Built-in Chisel Retainer
- Chisel Type

MODEL	BORE IN	CHISEL IN	STROKE IN	ABRASIVE CAPACITY	BLOWS PER MINUTE	AIR INLET SIZE IN	LENGTH IN	WEIGHT LB	RETAINER TYPE
B1-C-PT	1	.500	1.1	1/2" | 12.7 MM SQUARE STOCK	4600	1/4	12.0	4.41	BUILT-IN

All tools performance rated @ 90psi / 620 kPa air pressure.
Minimum Hose I.D.: 5/16in / 7.9mm
Standard Equipment: Operating instructions & service manual

B Series - Lever Start - Chisel Scaler

Built-in Chisel Retainer

- Built-in Chisel Retainer
- Chisel Type

MODEL	BORE IN	CHISEL IN	STROKE IN	ABRASIVE CAPACITY	BLOWS PER MINUTE	AIR INLET SIZE IN	LENGTH IN	WEIGHT LBS	RETAINER TYPE
B1-C-LT	1	.500	1.1	1/2" | 12.7 MM SQUARE STOCK	4600	1/4	10.3	4.41	BUILT-IN
BR-C-LT	1	.625	1.1	5/8" | 16 MM ROUND STOCK	4200	1/4	10.4	4.41	BUILT-IN

All tools performance rated @ 90psi / 620 kPa air pressure.
Minimum Hose I.D.: 5/16in / 7.9mm
Standard Equipment: Operating instructions & service manual

MP5195 - Long Reach Scaler

Long reach scaler design for quick and easy stripping of dirt, grease, paint, glue, resins, floor coverings and tiles

- 2200 Blows per minute
- For rugged scaling applications
- Long reach scaler design for quick and easy stripping of dirt, grease, paint, glue, resins, floor coverings and tiles
- Full Range of chisel blades

MODEL	STROKE	BLOWS PER MINUTE	LENGTH	PISTON DIAMETER	PISTON STROKE	WEIGHT
	IN		IN	IN	IN	LB
MP5195	1.5	2200	60	1.1	1.5	11.5

General: Air inlet 1/4" NPT for MP5195 Model. Use 1/4" (9.6mm) I.D. hose. All tools performance rated @ 90psi (620 kPa) air pressure. Standard Equipment: 51741 4" 5/8 hex chisel. Owners Manual, Parts list. Optional Accessories: 51741 4" chisel, 5/8 hex. 51742 2" chisel, 5/8 hex. 51743 8" scraper w/replaceable blade. 51744 12" scraper w/replaceable blade. 51745 2" alum. bronze non-spark pack. 51746 8" replacement blade for 51744 12" scraper. 51749 4" non-spark chisel

CH30 Series Chipping Hammer

Heavy duty for rugged use

- Heavy duty for rugged use
- Ring valve hard hitting hammer
- Forged steel hammer
- Heat treated cylinder & piston for reduced wear
- Replaceable bushing

MODEL	BORE	CHISEL	STROKE	ABRASIVE CAPACITY	BLOWS PER MINUTE	AIR INLET SIZE	LENGTH	WEIGHT	AIR INLET SIZE
	IN	IN	IN			IN	IN	LB	IN
CH-30-HX	1.125	.580	2.5	.580 IN | 14.7 MM HEX	2200	3/8	17.7	15.0	3/8
CH-30-RD	1.125	.680	2.5	.680 IN | 17.3 MM ROUND SHANK	2200	3/8	17.7	15.0	3/8

All tools performance rated @ 90psi / 620 kPa air pressure.
Minimum Hose I.D.: 1/2in / 12.7mm
Standard Equipment: Operating instructions & service manual

12-20 Series - Nibbler

Great for tight access application

- Great for tight access application
- Suitable for general industry

MODEL	CAPACITY	FREE SPEED	AIR INLET SIZE	LENGTH	WEIGHT	AIR INLET SIZE
		R/MIN	IN	IN	LB	IN
12L2062-96	18 GA. MILD STEEL	6	1/4	8.3	1.10	1/4

All tools performance rated @ 90psi / 620 kPa air pressure.

B1 Series Chisels (Safety Retainer Type)

For use with B1 Series Chisels

-

MODEL	DESCRIPTION	CUTTING EDGE LENGTH	STOCK SIZE	LENGTH	
		IN	IN	IN	MM
839050	SPOON CHISEL	1-3/8 IN	1/2 IN	7.3	184.15
839051	COLD CHISEL	3/4 IN	1/2 IN	7.5	190.5
839052	HARDENED BLANK		1/2 IN	7.5	190.5
839053	HARDENED BLANK		1/2 IN	12.0	304.8
839299	SPOON CHISEL	1-3/8 IN	1/2 IN	12.0	304.8
839334	SPOON CHISEL	1-3/8 IN	1/2 IN	18.0	457.2
839335	COLD CHISEL	3/4 IN	1/2 IN	18.0	457.2
839341	COLD CHISEL	3/4 IN	1/2 IN	12.0	304.8
839467	COLD CHISEL	1-1/2 IN	1/2 IN	8.0	203.2
839740	SPOON CHISEL	1 IN	1/2 IN	7.3	184.15

BR Series Chisels (Safety Retainer Type)

For use with BR Series Chisels

-

MODEL	DESCRIPTION	DIAMETER	CUTTING EDGE LENGTH	STOCK SIZE	LENGTH	
		IN	IN	IN	IN	MM
829150	COLD	5/8	3/4 X 3/32	5/8 IN	8.5	215.9
829165	LONG WIDE BLADE	5/8	1-3/4 X 3/32	5/8 IN	7.0	177.8
829173	BLANK	5/8		5/8 IN	7.5	190.5
829301	SCALING	5/8	1-1/4 X 3/32	5/8 IN	9.0	228.6
829310	SPOON	5/8	1-3/8 X 3/32	5/8 IN	7.5	190.5

Air Hoses - Cleco Dotco

•

MODEL	DESCRIPTION	FITTINGS (NPT)	TOOL SERIES	DIAMETER	LENGTH	LENGTH
				IN	FT	M
45-0948	AIR HOSE	1/4	10-04, 12-03, 12-04	1/4	5.0	1.524
45-1409	AIR HOSE	1/8 - 1/4	10-10, 10-11, 10-12	1/4	8.0	2.4384
45-1810	AIR HOSE	3/8 - 1/2		1/2	10.0	3.048
46-1610	AIR HOSE	3/8 - 3/8		3/8	10.0	3.048
A110026	AIR HOSE	1/8 - 3/8-24		3/16	6.0	1.8288
A139856	AIR HOSE	1/8 - 1/8		3/16	6.0	1.8288

3/16" & 1/4" hoses have braided covers, all others have neoprene covers.

Overhose - Cleco Dotco

- For use with Dotco series rear exhaust tools

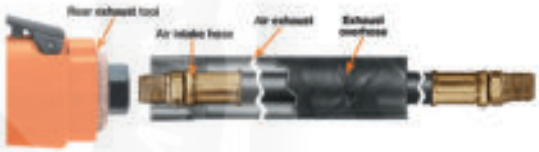

MODEL	DESCRIPTION	TOOL SERIES	LENGTH	LENGTH
			FT	M
45-0945	OVERHOSE ONLY	10-04	1.0	0.3048
45-0955	OVERHOSE ONLY	10-04	2.0	0.6096
45-0956	OVERHOSE ONLY	10-04	4.0	1.2192
45-0974	OVERHOSE ONLY	12-91	4.0	1.2192
45-1901	OVERHOSE ONLY	10-10, 10-11, 10-12	4.0	1.2192
45-1902	OVERHOSE ONLY	10-10, 10-11, 10-12	8.0	2.4384
45-1904	OVERHOSE ONLY	10-10, 10-11, 10-12	2.0	0.6096
45-2629	OVERHOSE ONLY	10-20, 10-21, 10-22, 10-25, 10-26, 10-27, 12-20, 12-21, 12-22, 12-25, 12-26, 12-27, 12-28, 15LS, 15LN, 12-10, 12-11, 12-12, 12-13, 15LF, 15-14	2.0	0.6096
45-2687	OVERHOSE ONLY	10-20, 10-21, 10-22, 10-25, 10-26, 10-27, 12-20, 12-21, 12-22, 12-25, 12-26, 12-27, 12-28, 15LS, 15LN, 12-10, 12-11, 12-12, 12-13, 15LF, 15-14, 14CF, 14CS, 14CN	4.0	1.2192
45-2688	OVERHOSE ONLY	10-20, 10-21, 10-22, 10-25, 10-26, 10-27, 12-20, 12-21, 12-22, 12-25, 12-26, 12-27, 12-28, 15LS, 15LN, 12-10, 12-11, 12-12, 12-13, 15LF, 15-14, 14CF, 14CS, 14CN	8.0	2.4384
45-6001	OVERHOSE ONLY	12-03, 12-04	4.0	1.2192
45-6002	OVERHOSE ONLY	12-03, 12-04	2.0	0.6096
45-6003	OVERHOSE ONLY	12-03, 12-04	1.0	0.3048

Overhose Assemblies and Conversion Kits - Cleco Dotco

For Use with Cleco Dotco Series rear exhaust tools

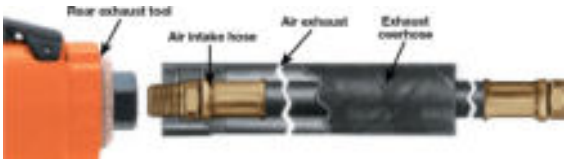

•

MODEL	DESCRIPTION	TOOL SERIES	LENGTHS
45-0946	INCLUDES 45-0945 OVERHOSE AND 45-0948 AIRHOSE	10-04	1.0 FT | 0.3 M OVERHOSE 5.0 FT | 1.5 M AIRHOSE
45-0953	INCLUDES 45-0955 OVERHOSE AND 45-0948 AIRHOSE	10-04	2.0 FT | 0.6 M OVERHOSE 5.0 FT | 1.5 M AIRHOSE
45-0954	INCLUDES 45-0956 OVERHOSE AND 45-0948 AIRHOSE	10-04	4.0 FT | 1.2 M OVERHOSE 5.0 FT | 1.5 M AIRHOSE
45-1930	INCLUDES 45-1904 OVERHOSE AND 45-1409 AIRHOSE	10-10, 10-11, 10-12	2.0 FT | 0.6 M OVERHOSE 8.0 FT | 2.4 M AIRHOSE
45-1931	INCLUDES 45-1901 OVERHOSE AND 45-1409 AIRHOSE	10-10, 10-11, 10-12	4.0 FT | 1.2 M OVERHOSE 8.0 FT | 2.4 M AIRHOSE
45-1932	INCLUDES 45-1902 OVERHOSE AND 45-1409 AIRHOSE	10-10, 10-11, 10-12	8.0 FT | 2.4 M OVERHOSE 8.0 FT | 2.4 M AIRHOSE
45-2783	NON-OVERHOSE TO OVERHOSE CONVERSION KIT. INCLUDES 45-2629 OVERHOSE AND 45-1408 AIRHOSE	12-10, 12-11, 12-12, 12-13, 15LF, 15-14	2.0 FT | 0.6 M OVERHOSE 8.0 FT | 2.4 M AIRHOSE
45-2784	NON-OVERHOSE TO OVERHOSE CONVERSION KIT. INCLUDES 45-2687 OVERHOSE AND 45-1408 AIRHOSE	12-10, 12-11, 12-12, 12-13, 15LF, 15-14	4.0 FT | 1.2 M OVERHOSE 8.0 FT | 2.4 M AIRHOSE
45-2785	NON-OVERHOSE TO OVERHOSE CONVERSION KIT. INCLUDES 45-2688 OVERHOSE AND 45-1408 AIRHOSE	12-10, 12-11, 12-12, 12-13, 15LF, 15-14	8.0 FT | 2.4 M OVERHOSE 8.0 FT | 2.4 M AIRHOSE
45-2786	NON-OVERHOSE TO OVERHOSE CONVERSION KIT. INCLUDES 45-2629 OVERHOSE AND 45-1508 AIRHOSE	10-20, 10-21, 10-22, 10-25, 10-26, 10-27, 12-20, 12-21, 12-22, 12-25, 12-26, 12-27, 12-28, 15LS, 15LN	2.0 FT | 0.6 M OVERHOSE 8.0 FT | 2.4 M AIRHOSE
45-2787	NON-OVERHOSE TO OVERHOSE CONVERSION KIT. INCLUDES 45-2687 OVERHOSE AND 45-1508 AIRHOSE	10-20, 10-21, 10-22, 10-25, 10-26, 10-27, 12-20, 12-21, 12-22, 12-25, 12-26, 12-27, 12-28, 15LS, 15LN	4.0 FT | 1.2 M OVERHOSE 8.0 FT | 2.4 M AIRHOSE
45-2788	NON-OVERHOSE TO OVERHOSE CONVERSION KIT. INCLUDES 45-2688 OVERHOSE AND 45-1508 AIRHOSE	10-20, 10-21, 10-22, 10-25, 10-26, 10-27, 12-20, 12-21, 12-22, 12-25, 12-26, 12-27, 12-28, 15LS, 15LN	8.0 FT | 2.4 M OVERHOSE 8.0 FT | 2.4 M AIRHOSE
45-6000	INCLUDES 45-6001 OVERHOSE AND 45-0948 AIRHOSE	12-03, 12-04	4.0 FT | 1.2 M OVERHOSE 5.0 FT | 1.5 M AIRHOSE
45-6012	INCLUDES 45-6002 OVERHOSE AND 45-0948 AIRHOSE	12-03, 12-04	2.0 FT | 0.6 M OVERHOSE 5.0 FT | 1.5 M AIRHOSE
45-6013	INCLUDES 45-6003 OVERHOSE AND 45-0948 AIRHOSE	12-03, 12-04	1.0 FT | 0.3 M OVERHOSE 5.0 FT | 1.5 M AIRHOSE

Activeswivel Cleco Dotco

Available for 1/4” NPT inlet only

MODEL	DESCRIPTION	AIR FLOW VOLUME	MAX PRESSURE	WEIGHT		AIR INLET SIZE
		SCFM	LB/IN² I BAR	LB	KG	IN
SW-102	ACTIVESWIVEL	25 M³/M	150	0.200	0.0907185	1/4

Lubricants

PART NUMBER	SIZE	DESCRIPTION	M.S.D.S. NO.	TABLE SORT ORDER
45-0918	1 QT. PLASTIC	LUBRICATING OIL - QT.	CPT-155	4
45-0919	1 GAL. METAL	LUBRICATING OIL - GAL.	CPT-155	5
45-0980	2 OZ. TUBE	MOLY-XL 250 OIL ANGLE HEAD GEAR GREASE FOR GRINDERS	CPT-148	9
45-0983	2 OZ. TUBE	DOTCO PLANETARY GEAR GREASE FOR GRINDERS & SANDERS	CPT-147	8
513156	18 OZ. CAN	MAGNALUBE-G ASSEMBLY TOOL TEFLON GREASE	CPT-145	7
533485	1 GAL. METAL	AIR TOOL OIL (500021) 1 GAL. CAN	CPT-153	2
535090		MR SERIES MOTORS - GEARING OIL 1 GAL. CAN		
536333	1 GAL. METAL	HIGH FILM STRENGTH OIL (FOR SEVERE USE) 1 GAL. CAN	CPT-154	3
539317	1 QT. PLASTIC	UNIVIS PULSE TOOL HYDRAULIC OIL	CPT-157	6
540397	1 QT. PLASTIC		CPT-153	1
60538		AIR LUBE 10W/NR AIR LINE OIL	CPT-153	
60539		AIR LUBE 10W/NR AIR LINE OIL	CPT-153	
633190		LUBE-A-TUBE		

Under normal conditions of use, lubrication products sold separately for or used within these tools should not cause an exposure hazard. Refer to the Material Safety Data Sheet M.S.D.S. for Safety and Disposal information. M.S.D.S. sheets shown in the chart are available upon request.

Push Type Grease Gun Cleco Dotco

Cleco Dotco Lube sold seperately - see above

- Push Type Grease Gun

MODEL	DESCRIPTION
45-1982	GREASE GUN

Airline Filter & Lubricator

Mounts in Hose Line.

- One ounce reservoir good for average 8-hour shift.

MODEL	DESCRIPTION	MAX PRESSURE	AIR INLET SIZE
		LB/IN² | BAR	IN
45-0201	LUBRICATOR	100 LB/IN² | 6.9 BAR	1/4
45-0301	LUBRICATOR	100 LB/IN² | 6.9 BAR	3/8

Cleco®
Production Tools

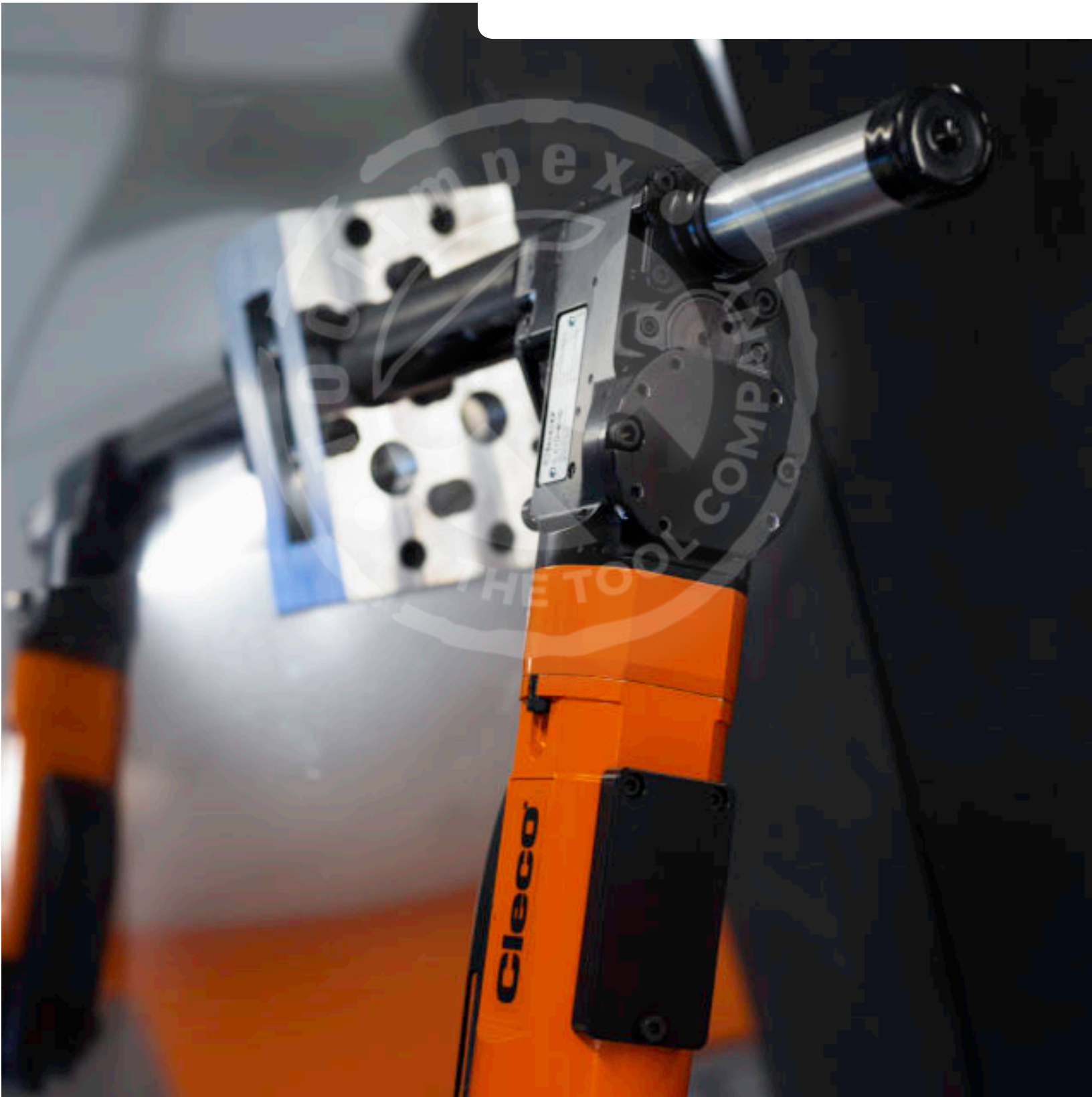

Precision and accuracy for portable automatic drilling.

Rely on powerful tools designed for aerostructure drilling and assembly

Major aerospace manufacturers rely on Cleco's configured advanced drilling solutions for quality-critical applications. Our tools drill precision holes for fasteners ensuring the accuracy required for a critical part of the assembly process.

A of tool options.

Cleco has the widest range of configurable solutions for Advanced Drilling

We offer positive feed tools in both fully automatic for higher cycle rates and manual for an entry level solution. We also offer hydraulic control air feed drills in standard pistol, self colleting pistol, pistol peck feed and compact angle for limited access applications.

Trained application specialists work with you to ensure the configured solution is optimized for your application needs.

For nutplate attachment applications we have our 10Q Nut Plate Drill configurable to meet the specific hole pattern with double wing, single wing and mickey mouse pressure feet. Add on options for lubrication, cycle, maintenance and life counting, error proofing and ergonomics ensure the solution meets the process needs.

Our most recent developed tools the A series are typically the starting point for a configured solution.

Cleco A Series: Increase and — decrease service and operating costs.

The A Series is made up of two product families the compact A2 series for holes up to ½" / 12.7mm and the robust A1 series for holes up to 1" / 25.4mm.

Developed with similar architecture, both tools offer a wide range of speeds and feeds to optimize the drilling process with governed turbine and vane motor options that minimize speed drop for consistent hole quality and cycle time.

Tools can produce a drilled and 100% countersunk hole including chip fragmentation when drilling using proven Mitis™ technology.

Design features such as easy access feed gear and Mitis™, self-contained bearings, captive O rings, external grease ports and shear pin, non-impact retract clutch enable up to 500 hours or 100k cycles between preventative maintenance.

Configured A Series provide an optimized solution for your needs.

The A Series tools offer a wide range of configuration options to ensure you get the solution you need.

Standard fixturing options for twist lock / ¼" turn mounting with and without vacuum; concentric collet mounting for smaller holes in both right angle and in-line/pistol grip configuration; a template foot solution for lower fixturing costs for both horizontal and vertical operation. Additional add on options such as cutters, cutter lubrication, cycle counter for cutter and maintenance monitoring allow additional process improvement.

A2 Series - Positive Feed - Automatic

Nominal Capacity 1/2in | 12.7mm in Al
Turbine 2.2hp | 1.6kW & Vane 1.4hp | 1kW
Thrust 400lb | 1800N
Base Weight 5lb | 2.3kg
Stroke Per Application

- Fully automatic drill cycle start, feed, retract, stop
- Drill and 100% countersink with chip fragmentation using proven Mitis ™ technology
- Easy change for both feed rate and Mitis™ in less than 15 minutes
- External shear pin for gear head protection and easy change
- Up to 500 hours / 100000 cycle PM interval
- Grease ports, self contained bearings and captive O rings reduce service cost
- Thrust overload for countersinking or in event of tool overthrust when drilling e.g. from broker cutter
- Available in both governed turbine or vane motor to minimize speed drop when drilling
- Wide range of fixturing options and accessories
- Many configurable options available - please contact us for configuration assistance

MODEL	MOTOR	SPEED	FEED RATE		SPINDLE	FIXTURING	ACCESSORIES
	CONFIGURATION	R/MIN	MM/REV	IN/REV	ATTACHMENT	OPTIONS	
A24T	RIGHT ANGLE TURBINE	450 | 550 650 | 700 850 | 1000 1200 | 1800 2700 | 3400 4000 | 4400 5400	.025 .05 .08 .10 .15 .18 .20	.001 .002 .003 .004 .006 .007 .008	SPECIALS ON REQUEST 1/4"-28 5/16"-24 3/8"-24 9/16"-18 200DA COLLET	•NOSE FOR TWIST LOCK BUSHING - STANDARD AND VACUUM •CONCENTRIC COLLET •TEMPLATE FOOT	•NOSE INDEXER •ON BOARD COOLANT •FLOOR PUMP COOLANT •ELECTRONIC CYCLE COUNTER (SERVICE, MAINTENANCE AND CUTTER LIFE) •CUTTERS •HANDLES FOR OPERATION AND HANDLING
A24V	RIGHT ANGLE VANE MOTOR	250 | 320 380 | 400 480 | 550 600 | 650 700 | 800 1000 | 1150 1500 | 1700 2300 | 2600 2900 | 3300 3700 | 3900 4200 | 4500 5200	.025 .05 .08 .10 .15 .18 .20	.001 .002 .003 .004 .006 .007 .008	SPECIALS ON REQUEST 1/4"-28 5/16"-24 3/8"-24 9/16"-18 200DA COLLET	•NOSE FOR TWIST LOCK BUSHING - STANDARD AND VACUUM •CONCENTRIC COLLET •TEMPLATE FOOT	•NOSE INDEXER •ON BOARD COOLANT •FLOOR PUMP COOLANT •ELECTRONIC CYCLE COUNTER (SERVICE, MAINTENANCE AND CUTTER LIFE) •CUTTERS •HANDLES FOR OPERATION AND HANDLING
A26T	IN LINE TURBINE	450 | 550 650 | 700 850 | 1000 1200 | 1800 2700 | 3400 4000 | 4400 5400	.025 .05 .08 .10 .15 .18 .20	.001 .002 .003 .004 .006 .007 .008	SPECIALS ON REQUEST 1/4"-28 5/16"-24 3/8"-24 9/16"-18 200DA COLLET	•NOSE FOR TWIST LOCK BUSHING - STANDARD AND VACUUM •CONCENTRIC COLLET •TEMPLATE FOOT	•NOSE INDEXER •ON BOARD COOLANT •FLOOR PUMP COOLANT •ELECTRONIC CYCLE COUNTER (SERVICE, MAINTENANCE AND CUTTER LIFE) •CUTTERS •HANDLES FOR OPERATION AND HANDLING
A26V	IN LINE VANE MOTOR	250 | 320 380 | 400 430 | 480 550 | 600 650 | 700 800 | 1000 1150 | 1500 1700 | 2300 2600 | 2900 3300 | 3700 3900 | 4200 4500 | 5200	.025 .05 .08 .10 .15 .18 .20	.001 .002 .003 .004 .006 .007 .008	SPECIALS ON REQUEST 1/4"-28 5/16"-24 3/8"-24 9/16"-18 200DA COLLET	•NOSE FOR TWIST LOCK BUSHING - STANDARD AND VACUUM •CONCENTRIC COLLET •TEMPLATE FOOT	•NOSE INDEXER •ON BOARD COOLANT •FLOOR PUMP COOLANT •ELECTRONIC CYCLE COUNTER (SERVICE, MAINTENANCE AND CUTTER LIFE) •CUTTERS •HANDLES FOR OPERATION AND HANDLING

A1 Series - Positive Feed - Automatic

Nominal Capacity 1in | 25.4mm in Al
Turbine 2.4hp | 1.8kW & Vane 1.7hp | 1.3kW
Thrust 500lb | 2200N
Base Weight 7lb | 3.2kg
Stroke Per Application

- Fully automatic drill cycle start, feed, retract, stop
- Drill and 100% countersink with chip fragmentation using proven Mitis ™ technology
- Easy change for both feed rate and Mitis ™ in less than 15 minutes
- External shear pin for gear head protection and easy change
- Up to 500 hours / 100000 cycle PM interval
- Grease ports, self contained bearings and captive O rings reduce service cost
- Thrust overload for countersinking or in event of tool overthrust when drilling e.g. from broken cutter
- Available in both governed turbine or vane motor to minimize speed drop when drilling
- Wide range of fixturing options and accessories
- Many customizable options available - please contact us for configuration assistance

MODEL	MOTOR	SPEED	FEED RATE		SPINDLE	FIXTURING	ACCESSORIES
	CONFIGURATION	R/MIN	MM/REV	IN/REV	ATTACHMENT	OPTIONS	
A14T	RIGHT ANGLE TURBINE	430 | 630 800 | 1000 1800 | 2600 3250	.025 .05 .08 .10 .15 .18 .20	.001 .002 .003 .004 .006 .007 .008	SPECIALS ON REQUEST 1/4"-28 5/16"-24 3/8"-24 9/16"-24 200DA COLLET	•NOSE FOR TWIST LOCK BUSHING - STANDARD AND VACUUM •DEPTH SENSING TWIST LOCK •CONCENTRIC COLLET •TEMPLATE FOOT	•NOSE INDEXER •ON BOARD COOLANT •FLOOR PUMP COOLANT •ELECTRONIC CYCLE COUNTER (SERVICE, MAINTENANCE AND CUTTER LIFE) •CUTTERS •HANDLES FOR OPERATION AND HANDLING
A14V	RIGHT ANGLE VANE MOTOR	190 | 250 320 | 350 410 | 460 510 | 600 670 | 760 850 | 950 1450 | 1700 1900 | 2100 2500 | 2800 3100	.025 .05 .08 .10 .15 .18 .20	.001 .002 .003 .004 .006 .007 .008	SPECIALS ON REQUEST 1/4"-28 5/16"-24 3/8"-24 9/16"-24 200DA COLLET	•NOSE FOR TWIST LOCK BUSHING - STANDARD AND VACUUM •DEPTH SENSING TWIST LOCK •CONCENTRIC COLLET •TEMPLATE FOOT	•NOSE INDEXER •ON BOARD COOLANT •FLOOR PUMP COOLANT •ELECTRONIC CYCLE COUNTER (SERVICE, MAINTENANCE AND CUTTER LIFE) •CUTTERS •HANDLES FOR OPERATION AND HANDLING
A16T	IN LINE TURBINE	430 | 630 800 | 1000 1800 | 2600 3250	.025 .05 .08 .10 .15 .18 .20	.001 .002 .003 .004 .006 .007 .008	SPECIALS ON REQUEST 1/4"-28 5/16"-24 3/8"-24 9/16"-24 200DA COLLET	•NOSE FOR TWIST LOCK BUSHING - STANDARD AND VACUUM •DEPTH SENSING TWIST LOCK •CONCENTRIC COLLET •TEMPLATE FOOT	•NOSE INDEXER •ON BOARD COOLANT •FLOOR PUMP COOLANT •ELECTRONIC CYCLE COUNTER (SERVICE, MAINTENANCE AND CUTTER LIFE) •CUTTERS •HANDLES FOR OPERATION AND HANDLING
A16V	IN LINE VANE MOTOR	190 | 250 320 | 350 410 | 460 510 | 600 670 | 760 850 | 950 1450 | 1700 1900 | 100 2500 | 2800 3100	.025 .05 .08 .10 .15 .18 .20	.001 .002 .003 .004 .006 .007 .008	SPECIALS ON REQUEST 1/4"-28 5/16"-24 3/8"-24 9/16"-24 200DA COLLET	•NOSE FOR TWIST LOCK BUSHING - STANDARD AND VACUUM •DEPTH SENSING TWIST LOCK •CONCENTRIC COLLET •TEMPLATE FOOT	•NOSE INDEXER •ON BOARD COOLANT •FLOOR PUMP COOLANT •ELECTRONIC CYCLE COUNTER (SERVICE, MAINTENANCE AND CUTTER LIFE) •CUTTERS •HANDLES FOR OPERATION AND HANDLING

9X2/230Q Series - Positive Feed - Automatic

Nominal Capacity 9X2 1/2" | 12.7mm in Al & 230Q 1 3/8" | 25mm in Al
Power 9x2 1.0hp | 0.75kW, Boosted 1.3hp | 1.0kW & 230Q 2.1hp | 1.6kW
Thrust 9x2 360lb | 1600N & 230Q 1800lb | 8000N
Base Weight 9x2 4.2lb | 2.1kg & 230Q 15.7lb | 7.1kg
Stroke Per Application

- Fully automatic drill cycle start, feed, retract, stop
- 230Q has external shear pin for gear head protection and easy change
- 230Q, 942 and 962 have thrust overload for countersinking or in event of tool overthrust when drilling e.g. from broken cutter, 932 and 952 are drill only
- Wide range of fixturing options and accessories
- Many configurable options available - please contact us for configuration assistance

MODEL	MOTOR	SPEED	FEED RATE		SPINDLE	FIXTURING	ACCESSORIES
	CONFIGURATION	R/MIN	MM/REV	IN/REV	ATTACHMENT	OPTIONS	
20932/932QR - BOOSTED	RIGHT ANGLE	450 | 800 1300 | 1600 2000 | 3200	0.015 0.03 0.05 0.07 0.1	0.0005 0.001 0.002 0.003 0.004	SPECIALS ON REQUEST 1/4"-28 5/16"-24 3/8"-24 9/16"-18 200DA COLLET	•NOSE FOR TWIST LOCK BUSHING WITH AND WITHOUT VACUUM •CONCENTRIC COLLET	•NOSE INDEXER •ON BOARD COOLANT •CYCLE COUNTER (SERVICE, MAINTENANCE AND CUTTER LIFE) •MITIS CHIP FRAGMENTATION (INTERNAL) •HANDLE •CUTTERS
20932/932QR - STD	RIGHT ANGLE	400 | 750 1100 | 1400 1700 | 2700 4500	0.015 0.03 0.05 0.07 0.1	0.0005 0.001 0.002 0.003 0.004	SPECIALS ON REQUEST 1/4"-28 5/16"-24 3/8"-24 9/16"-18 200DA COLLET	•NOSE FOR TWIST LOCK BUSHING WITH AND WITHOUT VACUUM •CONCENTRIC COLLET	•NOSE INDEXER •ON BOARD COOLANT •CYCLE COUNTER (SERVICE, MAINTENANCE AND CUTTER LIFE) •MITIS CHIP FRAGMENTATION (INTERNAL) •HANDLE •CUTTERS
20942/942QR-BOOSTED	RIGHT ANGLE	450 | 800 1300 | 1600 2000 | 3200	0.015 0.03 0.05 0.07 0.1	0.0005 0.001 0.002 0.003 0.004	SPECIALS ON REQUEST 1/4"-28 5/16"-24 3/8"-24 9/16"-18 200DA COLLET	•NOSE FOR TWIST LOCK BUSHING WITH AND WITHOUT VACUUM •DEPTH SENSING TWIST LOCK •CONCENTRIC COLLET	•NOSE INDEXER •ON BOARD COOLANT •CYCLE COUNTER (SERVICE, MAINTENANCE AND CUTTER LIFE) •MITIS CHIP FRAGMENTATION (INTERNAL) •HANDLE •CUTTERS
20942/942QR-STD	RIGHT ANGLE	400 | 750 1100 | 1400 1700 | 2700 4500	0.015 0.03 0.05 0.07 0.1	0.0005 0.001 0.002 0.003 0.004	SPECIALS ON REQUEST 1/4"-28 5/16"-24 3/8"-24 9/16"-18 200DA COLLET	•NOSE FOR TWIST LOCK BUSHING WITH AND WITHOUT VACUUM •DEPTH SENSING TWIST LOCK •CONCENTRIC COLLET	•NOSE INDEXER •ON BOARD COOLANT •CYCLE COUNTER (SERVICE, MAINTENANCE AND CUTTER LIFE) •MITIS CHIP FRAGMENTATION (INTERNAL) •HANDLE •CUTTERS
20952/952QB - BOOSTED	INLINE	450 | 800 1300 | 1600 2000 | 3200	0.015 0.03 0.05 0.07 0.1	0.0005 0.001 0.002 0.003 0.004	SPECIALS ON REQUEST 1/4"-28 5/16"-24 3/8"-24 9/16"-18 200DA COLLET	•NOSE FOR TWIST LOCK BUSHING WITH AND WITHOUT VACUUM •DEPTH SENSING TWIST LOCK •CONCENTRIC COLLET	•NOSE INDEXER •ON BOARD COOLANT •CYCLE COUNTER (SERVICE, MAINTENANCE AND CUTTER LIFE) •MITIS CHIP FRAGMENTATION (INTERNAL) •HANDLE •CUTTERS
20952/952QB - STD	INLINE	400 | 750 1100 | 1400 1700 | 2700 4500	0.015 0.03 0.05 0.07 0.1	0.0005 0.001 0.002 0.003 0.004	SPECIALS ON REQUEST 1/4"-28 5/16"-24 3/8"-24 9/16"-18 200DA COLLET	•NOSE FOR TWIST LOCK BUSHING WITH AND WITHOUT VACUUM •DEPTH SENSING TWIST LOCK •CONCENTRIC COLLET	•NOSE INDEXER •ON BOARD COOLANT •CYCLE COUNTER (SERVICE, MAINTENANCE AND CUTTER LIFE) •MITIS CHIP FRAGMENTATION (INTERNAL) •HANDLE •CUTTERS

MODEL	MOTOR	SPEED	FEED RATE		SPINDLE	FIXTURING	ACCESSORIES
	CONFIGURATION	R/MIN	MM/REV	IN/REV	ATTACHMENT	OPTIONS	
20962/962QB - BOOSTED	INLINE	450 | 800 1300 | 1600 2000 | 3200	0.015 0.03 0.05 0.07 0.1	0.0005 0.001 0.002 0.003 0.004	SPECIALS ON REQUEST 1/4”-28 5/16”-24 3/8”-24 9/16”-18 200DA COLLET	•NOSE FOR TWIST LOCK BUSHING WITH AND WITHOUT VACUUM •DEPTH SENSING TWIST LOCK •CONCENTRIC COLLET	•NOSE INDEXER •ON BOARD COOLANT •CYCLE COUNTER (SERVICE, MAINTENANCE AND CUTTER LIFE) •MITIS CHIP FRAGMENTATION (INTERNAL) •HANDLE •CUTTERS
20962/962QB - STD	INLINE	400 | 750 1100 | 1400 1700 | 2700 4500	0.015 0.03 0.05 0.07 0.1	0.0005 0.001 0.002 0.003 0.004	SPECIALS ON REQUEST 1/4”-28 5/16”-24 3/8”-24 9/16”-18 200DA COLLET	•NOSE FOR TWIST LOCK BUSHING WITH AND WITHOUT VACUUM •DEPTH SENSING TWIST LOCK •CONCENTRIC COLLET	•NOSE INDEXER •ON BOARD COOLANT •CYCLE COUNTER (SERVICE, MAINTENANCE AND CUTTER LIFE) •MITIS CHIP FRAGMENTATION (INTERNAL) •HANDLE •CUTTERS
230QB	INLINE	75 | 97 120 | 150 188 | 240 307 | 310 390 | 480 585 | 680 825 | 960 1155 | 1500	0.013 0.025 0.051 0.076 0.114 0.152 0.203 0.305	0.0005 0.001 0.002 0.003 0.0045 0.006 0.008 0.012	SPECIALS ON REQUEST 1/4”-28 5/16”-24 3/8”-24 9/16”-18 200DA COLLET	•NOSE FOR TWIST LOCK BUSHING WITH AND WITHOUT VACUUM •DEPTH DWELL ATTACHMENT FOR COUNTERSINKING	•NOSE INDEXER •ON BOARD COOLANT •CYCLE COUNTER (SERVICE, MAINTENANCE AND CUTTER LIFE) •MITIS CHIP FRAGMENTATION (INTERNAL) •HANDLE •CUTTERS
230QBV VARIABLE SPEED	INLINE	VARIABLE SPEED 75-187 150-375 330-780 600-1500	0.013 0.025 0.051 0.076 0.114 0.152 0.203 0.305	0.0005 0.001 0.002 0.003 0.0045 0.006 0.008 0.012	SPECIALS ON REQUEST 1/4”-28 5/16”-24 3/8”-24 9/16”-18 200DA COLLET	•NOSE FOR TWIST LOCK BUSHING WITH AND WITHOUT VACUUM •DEPTH DWELL ATTACHMENT FOR COUNTERSINKING	•NOSE INDEXER •ON BOARD COOLANT •CYCLE COUNTER (SERVICE, MAINTENANCE AND CUTTER LIFE) •MITIS CHIP FRAGMENTATION (INTERNAL) •HANDLE •CUTTERS
230QR	RIGHT ANGLE	50 | 65 80 | 100 125 | 160 205 | 260 320 | 390 440 | 550 640 | 770 1000	0.013 0.025 0.051 0.076 0.114 0.152 0.203 0.305	0.0005 0.001 0.002 0.003 0.0045 0.006 0.008 0.012	SPECIALS ON REQUEST 1/4”-28 5/16”-24 3/8”-24 9/16”-18 200DA COLLET	•NOSE FOR TWIST LOCK BUSHING WITH AND WITHOUT VACUUM •DEPTH DWELL ATTACHMENT FOR COUNTERSINKING	•NOSE INDEXER •ON BOARD COOLANT •CYCLE COUNTER (SERVICE, MAINTENANCE AND CUTTER LIFE) •MITIS CHIP FRAGMENTATION (INTERNAL) •HANDLE •CUTTERS
230QRV VARIABLE SPEED	RIGHT ANGLE	VARIABLE SPEED 50-125 100-250 210-520 420-1000	0.013 0.025 0.051 0.076 0.114 0.152 0.203 0.305	0.0005 0.001 0.002 0.003 0.0045 0.006 0.008 0.012	SPECIALS ON REQUEST 1/4”-28 5/16”-24 3/8”-24 9/16”-18 200DA COLLET	•NOSE FOR TWIST LOCK BUSHING WITH AND WITHOUT VACUUM •DEPTH DWELL ATTACHMENT FOR COUNTERSINKING	•NOSE INDEXER •ON BOARD COOLANT •CYCLE COUNTER (SERVICE, MAINTENANCE AND CUTTER LIFE) •MITIS CHIP FRAGMENTATION (INTERNAL) •HANDLE •CUTTERS

15QRHD/158QR Series - Positive Feed - Manual

Nominal Capacity 15QRHD 5/8" | 16mm in Al & 158QR 1" | 25mm in Al
Power 15 Series 1hp | 0.75kW & 158 Series 1.6hp | 1/2kW
Thrust 158Q 1000lb | 4400N & 158 & 15QR 500lb | 2200N
Base Weight 15 Series 5lb | 2.3kg & 158 Series 9.9lb | 4.5kg
Stroke Per Application

- Separate manual control for air motor and feed - less affect from air supply variation
- Feed is engaged by pressing down on feed engagement lever/button
- Automatic retract stop with protective rolling impulse clutch prevents jamming of spindle at end of retract.
- Air motor is manually started at beginning and shut off at completion of drill cycle.
- 15QRHD Externally replaceable shear pin provides gear protection if chips pack or cutter binds.
- Many customizable options available - please contact us for configuration assistance

MODEL	MOTOR	SPEED	FEED RATE		SPINDLE	FIXTURING	ACCESSORIES
	CONFIGURATION	R/MIN	MM/REV	IN/REV	ATTACHMENT	OPTIONS	
158-15QRHD	RIGHT ANGLE	110 | 140 230 | 290 490 | 600 1000 | 1200 2000 | 3000	.013 .025 .051 .076 .152	.0005 .001 .002 .003 .006	SPECIALS ON REQUEST 1/4"-28 5/16"-24 3/8"-24 9/16"-18 200DA COLLET	•NOSE FOR TWIST LOCK BUSHING WITH AND WITHOUT VACUUM •EXTERNAL MITIS NOSE WITH AND WITHOUT VACUUM •CONCENTRIC COLLET WITH AND WITHOUT VACUUM	•NOSE INDEXER •ON BOARD COOLANT •CYCLE COUNTER (SERVICE, MAINTENANCE AND CUTTER LIFE) •MITIS CHIP FRAGMENTATION •MODULE •HANDLES •CUTTERS
158-15QRH-DV - VARIABLE SPEED	RIGHT ANGLE	70-150 140-290 250-600 490-1200 2000-3000	.013 .025 .051 .076 .152	.0005 .001 .002 .003 .006	SPECIALS ON REQUEST 1/4"-28 5/16"-24 3/8"-24 9/16"-18 200DA COLLET	•NOSE FOR TWIST LOCK BUSHING WITH AND WITHOUT VACUUM •EXTERNAL MITIS NOSE WITH AND WITHOUT VACUUM •CONCENTRIC COLLET WITH AND WITHOUT VACUUM	•NOSE INDEXER •ON BOARD COOLANT •CYCLE COUNTER (SERVICE, MAINTENANCE AND CUTTER LIFE) •MITIS CHIP FRAGMENTATION •MODULE •HANDLES •CUTTERS
158QR	RIGHT ANGLE	47 | 56 70 | 94 110 | 120 140 | 185 194 | 230 288 | 380 388 | 460 485 | 570 760 | 950	.013 .025 .051 .089 .140 .191	.0005 .001 .002 .0035 .0055 .0075	SPECIALS ON REQUEST 1/4"-28 5/16"-24 3/8"-24 9/16"-18 200DA COLLET	•NOSE FOR TWIST LOCK BUSHING WITH AND WITHOUT VACUUM •EXTERNAL MITIS NOSE WITH AND WITHOUT VACUUM	•NOSE INDEXER •ON BOARD COOLANT •CYCLE COUNTER (SERVICE, MAINTENANCE AND CUTTER LIFE) •MITIS CHIP FRAGMENTATION •MODULE •HANDLES •CUTTERS
158QRV - VARIABLE SPEED	RIGHT ANGLE	47-120 92-230 194-485 380-950	.013 .025 .051 .089 .140 .191	.0005 .001 .002 .0035 .0055 .0075	SPECIALS ON REQUEST 1/4"-28 5/16"-24 3/8"-24 9/16"-18 200DA COLLET	•NOSE FOR TWIST LOCK BUSHING WITH AND WITHOUT VACUUM •EXTERNAL MITIS NOSE WITH AND WITHOUT VACUUM	•NOSE INDEXER •ON BOARD COOLANT •CYCLE COUNTER (SERVICE, MAINTENANCE AND CUTTER LIFE) •MITIS CHIP FRAGMENTATION •MODULE •HANDLES •CUTTERS
15QRHD	RIGHT ANGLE	165 | 265 335 | 465 660 | 1000 1650	.013 .025 .051 .076 .152	.0005 .001 .002 .003 .006	SPECIALS ON REQUEST 1/4"-28 5/16"-24 3/8"-24 9/16"-18 200DA COLLET	•NOSE FOR TWIST LOCK BUSHING WITH AND WITHOUT VACUUM •EXTERNAL MITIS NOSE WITH AND WITHOUT VACUUM •CONCENTRIC COLLET WITH AND WITHOUT VACUUM	•NOSE INDEXER •ON BOARD COOLANT •CYCLE COUNTER (SERVICE, MAINTENANCE AND CUTTER LIFE) •MITIS CHIP FRAGMENTATION •MODULE •HANDLES •CUTTERS

20802 - Positive Feed - Manual

Power 0.9hp | 0.7kW
Base Weight 6.6lb | 3kg
Stroke Std 1 / 25.4 - Other strokes on request

- Extremely compact for difficult access applications such as ribs and spars
- Modular design available in standard Twist lock, Mini C Clamp and Mini C Clamp Crowfoot
- For Mini C Clamp
  Simple and easy to fixture and operate
  Fixturing can be eliminated
  Expandable cover for safety
  Safety interlock to maintain clamp while running
  Max clamp force 200lbs/900N

MODEL	MOTOR	SPEED	FEED RATE		FIXTURING	ACCESSORIES
	CONFIGURATION	R/MIN	MM/REV	IN/REV	OPTIONS	
20802MCC	RIGHT ANGLE MINI C CLAMP	380 | 560 950 | 1500 1800 | 2200 3800 | 6100	.013 .025 .051 .076 .152	.005 .001 .002 .003 .006	•LOCATE ON PREHOLE IN COMPONENT •PILOT ON CUTTER •LOCATING PIN ON CLAMP •LOCATE ON OUTSIDE •DIAMETER OF BUSHING	•VACUUM •ONBOARD LUBRICATOR •FLOOR PUMP LUBRICATOR •ELECTRONIC CYCLE COUNTER •CUTTERS
20802MCCF	RIGHT ANGLE MINI C CLAMP CROWFOOT	380 | 560 950 | 1500 1800 | 2200 3800 | 6100	.013 .025 .051 .076 .152	.005 .001 .002 .003 .006	•LOCATE ON PREHOLE IN COMPONENT •PILOT ON CUTTER •LOCATING PIN ON CLAMP •LOCATE ON OUTSIDE •DIAMETER OF BUSHING	•VACUUM •ONBOARD LUBRICATOR •FLOOR PUMP LUBRICATOR •ELECTRONIC CYCLE COUNTER •CUTTERS
20802TL	RIGHT ANGLE TWIST LOCK	380 | 560 950 | 1500 1800 | 2200 3800 | 6100	.013 .025 .051 .076 .152	.005 .001 .002 .003 .006	•TWIST LOCK	•VACUUM •ONBOARD LUBRICATOR •FLOOR PUMP LUBRICATOR •ELECTRONIC CYCLE COUNTER •CUTTERS

Custom versions available. Contact us for application assistance.

CD/120Q/21500 Series - Portable Controlled Feed - Pistol Drill

Power CD-V & CD-4 0.9hp | 0.67kW & CD-5 1.3hp | 1.0kW & 21500 1.2hp | 0.95kW
Thrust CD1 90lb | 400N & CD-2 120lb | 535N & 21500 55lb | 245N
Base Weight 4lb | 1.8kg

- Compact portable airfeed drill with hydraulic feed control
- Reduced operator effort for drilling/countesinking
- Lightweight and comfortable grip
- Range of speeds, stroke and power
- Range of location/fixture options
- Vacuum option to reduce clean up
- Many customizable options available - please contact us for configuration assistance

MODEL	MOTOR CONFIGURATION	SPEED R/MIN	FIXTURING OPTIONS	ACCESSORIES	STROKE
21500/21502/120QP	PISTOL GRIP	150-550	•TEMPLATE BOSS LOCATION •TEMPLATE BOSS LOCATION WITH VACUUM •VACUUM CLAMPING	•ON BOARD COOLANT SUPPLY •CUTTERS	1.000 IN | 25.4 MM
CD14	PISTOL GRIP	500 | 800 1300 | 1900 3200 | 5200 6200 | 20000	•VACUUM AND CUTTER GUIDE OPTIONS. BUSHING TIP NOT INCLUDED. •TEMPLATE BOSS •21K BUSHING •23K BUSHING •24K BUSHING •MINI	•ON BOARD COOLANT SUPPLY •CUTTERS	1.000 IN | 25.4 MM
CD15	PISTOL GRIP	1000 | 1700 4500 | 18000	•VACUUM AND CUTTER GUIDE OPTIONS. BUSHING TIP NOT INCLUDED. •TEMPLATE BOSS •21K BUSHING •23K BUSHING •24K BUSHING •MINI	•ON BOARD COOLANT SUPPLY •CUTTERS	1.000 IN | 25.4 MM
CD1V	PISTOL GRIP	VARIABLE SPEED 150-550 400-1200 700-2400	•VACUUM AND CUTTER GUIDE OPTIONS. BUSHING TIP NOT INCLUDED. •TEMPLATE BOSS •21K BUSHING •23K BUSHING •24K BUSHING •MINI	•ON BOARD COOLANT SUPPLY •CUTTERS	1.000 IN | 25.4 MM
CD24	PISTOL GRIP	500 | 800 1300 | 1900 3200 | 5200 6200 | 20000	•VACUUM AND CUTTER GUIDE OPTIONS. BUSHING TIP NOT INCLUDED. •TEMPLATE BOSS •21K BUSHING •23K BUSHING •24K BUSHING •MINI	•ON BOARD COOLANT SUPPLY •CUTTERS	2.000 IN | 50.8 MM
CD25	PISTOL GRIP	1000 | 1700 4500 | 18000	•VACUUM AND CUTTER GUIDE OPTIONS. BUSHING TIP NOT INCLUDED. •TEMPLATE BOSS •21K BUSHING •23K BUSHING •24K BUSHING •MINI	•ON BOARD COOLANT SUPPLY •CUTTERS	2.000 IN | 50.8 MM
CD2V	PISTOL GRIP	VARIABLE SPEED 150-550 400-1200 700-2400	•VACUUM AND CUTTER GUIDE OPTIONS. BUSHING TIP NOT INCLUDED. •TEMPLATE BOSS •21K BUSHING •23K BUSHING •24K BUSHING •MINI	•ON BOARD COOLANT SUPPLY •CUTTERS	2.000 IN | 50.8 MM

PA/PB Series - Portable Controlled Feed - Angle Drill

Power 0.9hp | 0.67kW
Thrust PAX 120lb | 540N & PBX 160lb | 710N
Stroke 1.25in | 31.8mm

- PA for Drilling small holes in aluminum, PB for larger holes in aluminium and holes in Ti and steel
- Compact air feed with hydraulic feed control
- Access very confined spaces
- Modular design
- Variety of angle head, speeds and yoke sizes
- Thrust actuated by button/toggle or combine with drill lever (taper lock only)
- Drill point lubricator can improve hole quality and extend cutter life
- Many customizable options available - please contact us for configuration assistance

MODEL	MOTOR CONFIGURATION	SPEED R/MIN	SPINDLE ATTACHMENT	FIXTURING OPTIONS	ACCESSORIES	WEIGHT LB
PA2-5XX	ANGLE DRILL	300 | 500 750 | 1000 1300 | 2100 3500 | 4500	1/4"-28 HEAVY DUTY ANGLE HEAD 5/16"-24 HEAVY DUTY ANGLE HEAD 3/8"-24 HEAVY DUTY ANGLE HEAD	•SQUEEZE YOKE	•RISER BLOCK •ON BOARD COOLANT SUPPLY •CUTTERS	7.5
PA2-6XX	ANGLE DRILL	450 | 750 1100 | 1400 1850 | 3000 5000 | 6000	1/4"-28 MINIANGLE HEAD 5/16"-24 MINI ANGLE HEAD	•SQUEEZE YOKE	•RISER BLOCK •ON BOARD COOLANT SUPPLY •CUTTERS	7.5
PA2-8XX	ANGLE DRILL	300 | 500 750 | 1000 1300 | 2100 3500 | 4500	300DA COLLET SPINDLE	•SQUEEZE YOKE	•RISER BLOCK •ON BOARD COOLANT SUPPLY •CUTTERS	7.5
PA3-5XX	ANGLE DRILL	300 | 500 750 | 1000 1300 | 2100 3500 | 4500	1/4"-28 HEAVY DUTY ANGLE HEAD 5/16"-24 HEAVY DUTY ANGLE HEAD 3/8"-24 HEAVY DUTY ANGLE HEAD	•PUSH AWAY	•RISER BLOCK •ON BOARD COOLANT SUPPLY •CUTTERS	7.1
PA3-6XX	ANGLE DRILL	450 | 750 1100 | 1400 1850 | 3000 5000 | 6000	1/4"-28 MINIANGLE HEAD 5/16"-24 MINI ANGLE HEAD	•PUSH AWAY	•RISER BLOCK •ON BOARD COOLANT SUPPLY •CUTTERS	7.1
PA3-8XX	ANGLE DRILL	300 | 500 750 | 1000 1300 | 2100 3500 | 4500	300DA COLLET SPINDLE	•PUSH AWAY	•RISER BLOCK •ON BOARD COOLANT SUPPLY •CUTTERS	7.1
PA5-5XX	ANGLE DRILL	300 | 500 750 | 1000 1300 | 2100 3500 | 4500	1/4"-28 HEAVY DUTY ANGLE HEAD 5/16"-24 HEAVY DUTY ANGLE HEAD 3/8"-24 HEAVY DUTY ANGLE HEAD	•TAPER LOCK •SHORT YOKE	•ON BOARD COOLANT SUPPLY •CUTTERS	5.7
PA5-6XX	ANGLE DRILL	450 | 750 1100 | 1400 1850 | 3000 5000 | 6000	1/4"-28 MINIANGLE HEAD 5/16"-24 MINI ANGLE HEAD	•TAPER LOCK •SHORT YOKE	•ON BOARD COOLANT SUPPLY •CUTTERS	5.7
PA5-8XX	ANGLE DRILL	300 | 500 750 | 1000 1300 | 2100 3500 | 4500	300DA COLLET SPINDLE	•TAPER LOCK •SHORT YOKE	•ON BOARD COOLANT SUPPLY •CUTTERS	5.7
PB2-5XX	ANGLE DRILL	300 | 500 750 | 1000 1300 | 2100 3500 | 4500	1/4"-28 HEAVY DUTY ANGLE HEAD 5/16"-24 HEAVY DUTY ANGLE HEAD 3/8"-24 HEAVY DUTY ANGLE HEAD	•SQUEEZE YOKE	•RISER BLOCK •ON BOARD COOLANT SUPPLY •CUTTERS	8.8

Advanced Drilling

MODEL	MOTOR CONFIGURATION	SPEED R/MIN	SPINDLE ATTACHMENT	FIXTURING OPTIONS	ACCESSORIES	WEIGHT LB
PB2-6XX	ANGLE DRILL	450 | 750 1100 | 1400 1850 | 3000 5000 | 6000	1/4”-28 MINIANGLE HEAD 5/16”-24 MINI ANGLE HEAD	•SQUEEZE YOKE	•RISER BLOCK •ON BOARD COOLANT SUPPLY •CUTTERS	8.8
PB2-8XX	ANGLE DRILL	300 | 500 750 | 1000 1300 | 2100 3500 | 4500	300DA COLLET SPINDLE	•SQUEEZE YOKE	•RISER BLOCK •ON BOARD COOLANT SUPPLY •CUTTERS	8.8
PB3-5XX	ANGLE DRILL	300 | 500 750 | 1000 1300 | 2100 3500 | 4500	1/4”-28 HEAVY DUTY ANGLE HEAD 5/16”-24 HEAVY DUTY ANGLE HEAD 3/8”-24 HEAVY DUTY ANGLE HEAD	•PUSH AWAY	•RISER BLOCK •ON BOARD COOLANT SUPPLY •CUTTERS	8.4
PB3-6XX	ANGLE DRILL	450 | 750 1100 | 1400 1850 | 3000 5000 | 6000	1/4”-28 MINIANGLE HEAD 5/16”-24 MINI ANGLE HEAD	•PUSH AWAY	•RISER BLOCK •ON BOARD COOLANT SUPPLY •CUTTERS	8.4
PB3-8XX	ANGLE DRILL	300 | 500 750 | 1000 1300 | 2100 3500 | 4500	300DA COLLET SPINDLE	•PUSH AWAY	•RISER BLOCK •ON BOARD COOLANT SUPPLY •CUTTERS	8.4
PB5-5XX	ANGLE DRILL	300 | 500 750 | 1000 1300 | 2100 3500 | 4500	1/4”-28 MINIANGLE HEAD 5/16”-24 MINI ANGLE HEAD	•TAPER LOCK •SHORT YOKE	•ON BOARD COOLANT SUPPLY •CUTTERS	7.1
PB5-6XX	ANGLE DRILL	450 | 750 1100 | 1400 1850 | 3000 5000 | 6000	1/4”-28 MINIANGLE HEAD 5/16”-24 MINI ANGLE HEAD	•TAPER LOCK •SHORT YOKE	•ON BOARD COOLANT SUPPLY •CUTTERS	7.1
PB5-8XX	ANGLE DRILL	300 | 500 750 | 1000 1300 | 2100 3500 | 4500	300DA COLLET SPINDLE	•TAPER LOCK •SHORT YOKE	•ON BOARD COOLANT SUPPLY •CUTTERS	7.1

10Q Series - Portable Controlled Feed - Nut Plate Drill

Power 0.75hp | 0.56kW
Thrust 180lb | 800N
Weight 10QNPD 5.1lb | 2.3kg & 10QNPDM 7.3lb | 3.3kg
Stroke 0.6in | 15.2mm

- Twin spindle drill for Nut plate fasteners
- Large range of pressure feet to suit nut plate designs
- Capacity .1285” Drill/ .250” Countersink*
- Minimum Countersink Depth Accuracy of +/-.001”
- Countersink Depth adjustable in .001” increments
- Variable spacing available from .3”/7.6mm to 1.0”/25.4mm
- M Mini Spindle Option for closer centers (0.219/5.6mm)” min)
- Pressure foot options to suit Nut plate Centers
- Many customizable options available - please contact us for configuration assistance

MODEL	MOTOR CONFIGURATION	SPEED R/MIN	FIXTURING OPTIONS	ACCESSORIES
10QNPD	PISTOL GRIP	600/6000	•DOUBLE WING •SINGLE WING •MICKEY MOUSE	•BOOSTER PUMP (STD THRUST X 2.5) •ON BOARD COOLANT •CYCLE COUNTER (SERVICE, MAINTENANCE AND CUTTER LIFE) •CUTTERS •VACUUM SHROUD
10QNPDM	PISTOL GRIP	6000	•DOUBLE WING •SINGLE WING •MICKEY MOUSE	•BOOSTER PUMP (STD THRUST X 2.5) •ON BOARD COOLANT •CYCLE COUNTER (SERVICE, MAINTENANCE AND CUTTER LIFE) •CUTTERS •VACUUM SHROUD

14CF Series - Pistol Drill Non-Reversible

0.4hp / 0.30kW

600-29000rpm

- Comfort grip with ergonomic finger and thumb guides to aid control
- Supplied with Jacobs® Keyed Chuck or Threaded Termination for Keyless Chuck/Collet
- Excellent for aerospace, metal fabrication, and wood working applications

MODEL	TERMINATION	SPEED	WEIGHT	LENGTH
		R/MIN	LB	IN
14CFS97-38	1/4" CHUCK	600	1.76	6.9
14CFS97-51	3/8" CHUCK	600	1.76	6.9
14CFS97-40	3/8" - 24 E	600	1.76	6.9
14CFS96-38	1/4" CHUCK	700	1.76	6.9
14CFS96-51	3/8" CHUCK	700	1.76	6.9
14CFS96-40	3/8" - 24 E	700	1.76	6.9
14CFS95-38	1/4" CHUCK	1000	1.76	6.9
14CFS95-51	3/8" CHUCK	1000	1.76	6.9
14CFS95-40	3/8" - 24 E	1000	1.76	6.9
14CFS94-38	1/4" CHUCK	2400	1.54	5.7
14CFS94-51	3/8" CHUCK	2400	1.54	5.7
14CFS94-40	3/8" - 24 E	2400	1.54	5.7
14CFS93-38	1/4" CHUCK	3200	1.54	5.7
14CFS93-51	3/8" CHUCK	3200	1.54	5.7
14CFS93-40	3/8" - 24 E	3200	1.54	5.7
14CFS92-38	1/4" CHUCK	3800	1.54	5.7
14CFS92-51	3/8" CHUCK	3800	1.54	5.7
14CFS92-40	3/8" - 24 E	3800	1.54	5.7
14CFS91-38	1/4" CHUCK	5200	1.54	5.7
14CFS91-51	3/8" CHUCK	5200	1.54	5.7
14CFS91-40	3/8" - 24 E	5200	1.54	5.7
14CFS90-38	1/4" CHUCK	29000	1.54	5.7
14CFS90-51	3/8" CHUCK	29000	1.54	5.7
14CFS90-40	3/8" - 24 E	29000	1.54	5.7

All tools performance rated @ 90psi / 620 kPa air pressure.
Air inlet size: 1/4in
Minimum Hose I.D.: 5/16in / 7.9mm
Drill Diameter Capacity Matches Chuck Size

14CS Series - Pistol Drill Non-Reversible

0.6hp / 0.45kW

500-20000rpm

- Comfort grip with ergonomic finger and thumb guides to aid control
- Supplied with Jacobs® Keyed Chuck or Threaded Termination for Keyless Chuck/Collet
- Excellent for aerospace, metal fabrication, and wood working applications

MODEL	TERMINATION	SPEED	WEIGHT	LENGTH
		R/MIN	LB	IN
14CSL97-40	3/8" - 24 E	500	2.87	8.1
14CSL97-51	3/8" CHUCK	500	2.87	8.1
14CSL95-40	3/8" - 24 E	1300	2.87	8.1
14CSL95-51	3/8" CHUCK	1300	2.87	8.1
14CSL92-38	1/4" CHUCK	3200	2.20	0.63
14CSL92-40	3/8" - 24 E	3200	2.20	0.63
14CSL91-38	1/4" CHUCK	5200	2.20	0.63
14CSL91-40	3/8" - 24 E	5200	2.20	0.63
14CSL98-38	1/4" CHUCK	6000	2.20	0.63
14CSL98-40	3/8" - 24 E	6000	2.20	0.63
14CSL90-38	1/4" CHUCK	20000	2.20	0.63
14CSL90-40	3/8" - 24 E	20000	2.20	0.63

All tools performance rated @ 90psi / 620 kPa air pressure.
Air inlet size: 1/4in
Minimum Hose I.D.: 5/16in / 7.9mm
Standard equipment: Jacobs geared chuck, chuck key
Drill diameter capacity matches chuck size.

14CN Series - Pistol Drill Non-Reversible

0.9hp / 0.67kW

500-20000rpm

- Comfort grip with ergonomic finger and thumb guides to aid control
- Supplied with Jacobs® Keyed Chuck or Threaded Termination for Keyless Chuck/Collet
- Excellent for aerospace, metal fabrication, and wood working applications
- 1/2” models equipped with dead handle

MODEL	TERMINATION	SPEED	WEIGHT	LENGTH
		R/MIN	LB	IN
14CNL97-51	3/8” CHUCK	500	3.53	9.1
14CNL97-40	3/8” - 24 E	500	3.53	9.1
14CNL97-53	1/2” CHUCK	500	3.53	9.1
14CNL95-51	3/8” CHUCK	1300	2.87	8.6
14CNL95-40	3/8” - 24 E	1300	2.87	8.6
14CNL92-38	1/4” CHUCK	3200	2.43	7.2
14CNL92-51	3/8” CHUCK	3200	2.43	7.2
14CNL92-53	1/2” CHUCK	3200	2.43	7.2
14CNL92-40	3/8” - 24 E	3200	2.43	7.2
14CNL91-51	3/8” CHUCK	5200	2.43	7.2
14CNL91-40	3/8” - 24 E	5200	2.43	7.2
14CNL98-38	1/4” CHUCK	6000	2.20	6.8
14CNL98-51	3/8” CHUCK	6000	2.20	6.8
14CNL98-53	1/2” CHUCK	6000	2.20	6.8
14CNL98-40	3/8” - 24 E	6000	2.20	6.8
14CNL90-38	1/4” CHUCK	20000	2.20	6.8
14CNL90-40	3/8” - 24 E	20000	2.20	6.8

All tools performance rated @ 90psi / 620 kPa air pressure.
Air inlet size: 1/4in
Minimum Hose I.D.: 5/16in / 7.9mm
Standard equipment: Jacobs geared chuck, chuck key
Drill diameter capacity matches chuck size.

14CH Series - Pistol Drill Non-Reversible

1.4hp / 1.0 kW

3200/6000rpm

High speed/power for Al or Composite Drilling

- Comfort grip with ergonomic finger and thumb guides to aid control
- Supplied with Jacobs® Keyed Chuck or Threaded Termination for Keyless Chuck/Collet
- Excellent for aerospace, metal fabrication, and wood working applications

MODEL	TERMINATION	SPEED	WEIGHT	LENGTH
		R/MIN	LB	IN
14CHL92-38	1/4" CHUCK	3200	2.65	6.5
14CHL92-40	3/8" - 24 E	3200	2.43	5.5
14CHL92-51	3/8" CHUCK	3200	2.87	7.1
14CHL92-53	1/2" CHUCK	3200	3.75	7.4
14CHL98-38	1/4" CHUCK	6000	2.65	6.5
14CHL98-40	3/8" - 24 E	6000	2.43	5.5
14CHL98-51	3/8" CHUCK	6000	2.87	7.1
14CHL98-53	1/2" CHUCK	6000	3.75	7.4

All tools performance rated @ 90psi / 620 kPa air pressure.
Air inlet size: 1/4in
Minimum Hose I.D.: 5/16in / 7.9mm
Standard equipment: Jacobs geared chuck, chuck key
Drill diameter capacity matches chuck size.

MP14 Series - Pistol Drill Reversible/Non-Reversible

Industrial grade medium duty drills suitable for a wide range of production and MRO applications
MP1457/1463 1.0hp / 0.75 kW

MP1458 1.2hp / 0.90kW

- 2-step throttle for easy starting
- Built-in, no-clog mufflers for quiet operation
- Hardened and ground precision parts for extended service life

MODEL	TERMINATION	SPEED	WEIGHT	LENGTH
		R/MIN	LB	IN
MP1457-51	3/8" CHUCK	2600	1.98	7.5
MP1458-55	1/2" CHUCK	1200	2.20	9.0
MP1463-51	3/8" CHUCK	1800	2.43	6.8

All tools performance rated @ 90psi / 620 kPa air pressure.
Air inlet size: 1/4in
Minimum Hose I.D.: 5/16in / 7.9mm
Drill Diameter Capacity Matches Chuck Size

15DP Series - Pistol Drill Non-Reversible

1.0hp / 0.75kW

160-1400rpm

Low speed for Ti/Hard Metals

- Powerful motor
- Excellent for slow speed applications
- 1/2" models equipped with dead handle

MODEL	TERMINATION	SPEED	WEIGHT	LENGTH
		R/MIN	LB	IN
15DP-1.6B-53	1/2" CHUCK	160	6.0	9.8
15DP-4B-53	1/2" CHUCK	400	5.5	8.5
15DP-8B-53	1/2" CHUCK	800	5.5	8.5
15DP-14B-49	3/8" CHUCK	1400	4.41	8.3

All tools performance rated @ 90psi / 620 kPa air pressure.
Standard Equipment: Operating instructions and service manual Dead handles on all models except 15DP-14B 3-Jaw Chuck and Key
General: Air Inlet: 3/8" NPTF, Minimum Hose Size: 3/8", Spindle Thread: 1/2"-20, Spindle Offset: Pistol Grip: 31/32"
Drill Diameter Capacity Matches Chuck Size

135DPV Series - Pistol Drill Non-Reversible Variable Speed

0.7hp / 0.5kW

150-2400rpm

Governed Speed Setting/ Control

- Flexible speed setting for range of hole sizes
- Variable speed can replace multiple other tools
- Calibrated governed speed control

MODEL	TERMINATION	SPEED	GOVERNED RPM RANGE	WEIGHT	LENGTH
		R/MIN	R/MIN	LB	IN
135DPV-7B-43	1/2" CHUCK	600	150 – 550 RPM	3.53	9.6
135DPV-7B-50	1/2" CHUCK	600	150 – 550 RPM	3.53	9.6
135DPV-14B-50	1/2" CHUCK	1250	400 – 1,200 RPM	3.31	9.3
135DPV-14B-51	3/8" CHUCK	1250	400 – 1,200 RPM	3.31	9.3
135DPV-28B-51	3/8" CHUCK	2600	700 – 2,400 RPM	3.31	8.5

All tools performance rated @ 90psi / 620 kPa air pressure.
Standard Equipment: Operating instructions, service manual, 3-Jaw Chuck and Key-Jaw Chuck and Key
General: Air Inlet: 1/4in NPT, Minimum Hose Size: 1/4in / 6mm, Spindle Offset: 25/32in / 20mm
Drill Diameter Capacity Matches Chuck Size

15LF Series - Inline Drill

0.4hp / 0.30kW

600-28500rpm

- Supplied with Jacobs® Keyed Chuck or Threaded Termination for Keyless Chuck/Collet
- Rear Exhaust
- Lock off safety lever standard

MODEL	TERMINATION	SPEED	WEIGHT	LENGTH
		R/MIN	LB	IN
15LF087-38	1/4" CHUCK	600	1.98	8.6
15LF087-40	3/8" - 24 E	600	1.98	8.6
15LF086-38	1/4" CHUCK	750	1.32	8.0
15LF085-38	1/4" CHUCK	1000	1.32	8.0
15LF085-40	3/8" - 24 E	1000	1.32	8.0
15LF084-38	1/4" CHUCK	2400	1.32	8.0
15LF083-38	1/4" CHUCK	3300	1.32	8.0
15LF083-40	3/8" - 24 E	3300	1.32	8.0
15LF082-38	1/4" CHUCK	4000	1.32	8.0
15LF082-40	3/8" - 24 E	4000	1.32	7.3
15LF081-38	1/4" CHUCK	5300	1.32	8.0
15LF081-40	3/8" - 24 E	5300	1.32	8.0
15LF080-38	1/4" CHUCK	28500	0.9	0.63

All tools performance rated @ 90psi / 620 kPa air pressure.
Air inlet size: 1/4in
Minimum Hose I.D.: 1/4in / 6.4mm
Standard Equipment: Jacobs geared chuck, chuck key
Drill diameter capacity matches chuck size.

15L14 Series - Right Angle Drill

0.3hp / 0.22kW
1500-20000rpm
Up to 1/4" Capacity

- Chuck, Collet and 1/4"-28 internal output options
- Rear Exhaust
- Lock off Safety lever standard

MODEL	TERMINATION	SPEED	WEIGHT	LENGTH
		R/MIN	LB	IN
15L1487-32	1/4"-28 I	1500	1.2	8.0
15L1487-36	1/4" COLLET	1500	1.2	8.0
15L1487-38	1/4" CHUCK	1500	1.5	8.0
15L1488-36	1/4" COLLET	2400	1.6	8.7
15L1488-38	1/4" CHUCK	2400	1.5	8.0
15L1489-32	1/4"-28 I	3600	1.6	8.7
15L1489-36	1/4" COLLET	3600	1.6	8.7
15L1489-38	1/4" CHUCK	3600	1.5	8.0
15L1489-51	3/8" CHUCK	3600	1.5	8.0
15L1470-37	5/32" CHUCK	12000	1.2	6.9
15L1401-37	5/32" CHUCK	20000	1.0	6.2
15L1471-37	5/32" CHUCK	20000	1.2	6.9

All tools performance rated @ 90psi / 620 kPa air pressure.
Air inlet size: 1/4in
Minimum Hose I.D.: 1/4in / 6.4mm
Standard Equipment: Jacobs geared chuck, chuck key
Drill diameter capacity matches chuck size.

15LF Series - Right Angle Drill - Light Duty/ Small Head Height

0.4hp / 0.30kW
600-5300rpm
Ideal for Restricted Access Applications

- -62 1/4”-28 Internal thread standard
- Other terminations available:
  -61 10-32 Internal Thread
  -63 Threaded Collet
  -64 5/16”-24 Internal Thread
- Other Angle Heads Available:
  -5X Heavy Duty
  -7X Compact Style
  -4X 45 degree Angle Head
  -9X 360 degree Angle Head
- Rear Exhaust
- Lock off safety lever standard

MODEL	TERMINATION	SPEED	WEIGHT	LENGTH
		R/MIN	LB	IN
15LF287-62	1/4”-28 I	600	1.9	11.8
15LF286-62	1/4”-28 I	750	1.9	11.8
15LF285-62	1/4”-28 I	1000	1.9	11.8
15LF284-62	1/4”-28 I	2400	1.8	11.1
15LF283-62	1/4”-28 I	3300	1.6	10.7
15LF282-62	1/4”-28 I	4000	1.6	10.7
15LF281-62	1/4”-28 I	5300	1.6	10.7

All tools performance rated @ 90psi / 620 kPa air pressure.
Air inlet size: 1/4in
Minimum Hose I.D.: 1/4in / 6.4mm
Standard Equipment: Jacobs geared chuck, chuck key
Drill diameter capacity matches chuck size.

15LF Series - Right Angle Drill - Heavy Duty Head

0.4hp / 0.30kW
420-3700rpm
Ideal for Restricted Access Applications

- -52 1/4”-28 Internal thread standard
- Other terminations Available:
  -51 10-32 Internal Thread
  -53 Threaded Collet
  -54 5/16”-24 Internal Thread
  -55 3/8”-24 Internal Thread
  -59NC 3/8”-24 External Thread
- Other Angle Heads Available:
  -6X Light Duty
  -7X Compact Style
  -4X 45 degree Angle Head
  -9X 360 degree Angle Head
- Rear Exhaust
- Lock off safety lever standard

MODEL	TERMINATION	SPEED	WEIGHT	LENGTH
		R/MIN	LB	IN
15LF287-52	1/4”-28 I	420	2	12.0
15LF286-52	1/4”-28 I	525	2	12.0
15LF285-52	1/4”-28 I	700	2	12.0
15LF284-52	1/4”-28 I	1700	1.8	10.6
15LF283-52	1/4”-28 I	2300	1.7	11.0
15LF282-52	1/4”-28 I	2800	1.7	11.0
15LF281-52	1/4”-28 I	3700	1.7	11.0

All tools performance rated @ 90psi / 620 kPa air pressure.
Air inlet size: 1/4in
Minimum Hose I.D.: 1/4in / 6.4mm
Standard Equipment: Jacobs geared chuck, chuck key
Drill diameter capacity matches chuck size.

15LS Series - Right Angle Drill - Light Duty/ Small Head Height

0.6hp / 0.45kW
500-5400 rpm
Ideal for Restricted Access Applications

- -62 1/4”-28 Internal thread standard
- Other terminations available:
  -61 10-32 Internal Thread
  -63 Threaded Collet
  -64 5/16”-24 Internal Thread
  -Quick Change Indexable Heads
- Other Angle Heads Available:
  -5X Heavy Duty
  -7X Compact Style
  -4X 45 degree Angle Head
  -9X 360 degree Angle Head
- Rear Exhaust
- Lock off safety lever standard

MODEL	TERMINATION	SPEED	WEIGHT	LENGTH
		R/MIN	LB	IN
15LS287-62	1/4”-28 I	500	1.9	12.7
15LS286-62	1/4”-28 I	840	1.9	12.7
15LS285-62	1/4”-28 I	1360	1.9	12.7
15LS284-62	1/4”-28 I	1660	1.9	12.4
15LS283-62	1/4”-28 I	2010	2.3	11.5
15LS282-62	1/4”-28 I	3370	2.3	11.5
15LS281-62	1/4”-28 I	5430	2.3	11.5

All tools performance rated @ 90psi / 620 kPa air pressure.
Air inlet size: 1/4in
Standard Equipment: 600 Series Mini Angle Head with 1/4”-28 internal thread

15LS Series - Right Angle Drill - Heavy Duty Head

0.6hp / 0.45kW
350-3800 rpm
Ideal for Restricted Access Applications

- -52 1/4”-28 Internal thread standard
- Other terminations Available:
  -51 10-32 Internal Thread
  -53 Threaded Collet
  -54 5/16”-24 Internal Thread
  -55 3/8”-24 Internal Thread
  -59NC 3/8”-24 External Thread
  -Quick Change Indexable Heads
- Other Angle Heads Available:
  -6X Light Duty
  -7X Compact Style
  -4X 45 degree Angle Head
  -9X 360 degree Angle Head
- Rear Exhaust
- Lock off safety lever standard

MODEL	TERMINATION	SPEED	WEIGHT	LENGTH
		R/MIN	LB	IN
15LS287-52	1/4”-28 I	350	2.87	12.3
15LS286-52	1/4”-28 I	590	2.87	12.3
15LS285-52	1/4”-28 I	950	2.87	12.3
15LS283-52	1/4”-28 I	1410	2.43	11.0
15LS282-52	1/4”-28 I	2360	2.43	11.0
15LS281-52	1/4”-28 I	3800	2.43	11.0

All tools performance rated @ 90psi / 620 kPa air pressure.
Air inlet size: 1/4in
Standard Equipment: 500 Series Heavy Duty Angle Head with 1/4”-28

15LN Series - Right Angle Drill - Light Duty/ Small Head Height

0.9hp / 0.67kW
320-5600 rpm
Ideal for Restricted Access Applications

- -62 1/4”-28 Internal thread standard
- Other terminations available:
  -61 10-32 Internal Thread
  -63 Threaded Collet
  -64 5/16”-24 Internal Thread
- Other Angle Heads Available:
  -5X Heavy Duty
  -7X Compact Style
  -4X 45 degree Angle Head
  -9X 360 degree Angle Head
- Rear Exhaust
- Lock off safety lever standard

MODEL	TERMINATION	SPEED	WEIGHT	LENGTH
		R/MIN	LB	IN
15LN287-62	1/4”-28 I	320	2.5	12.0
15LN286-62	1/4”-28 I	540	2.5	13.5
15LN285-62	1/4”-28 I	1000	2.5	12.0
15LN284-62	1/4”-28 I	1530	2.5	12.0
15LN283-62	1/4”-28 I	1850	2.5	12.0
15LN282-62	1/4”-28 I	3100	2.5	12.0
15LN281-62	1/4”-28 I	5000	2.5	12.0
15LN288-62	1/4”-28 I	5600	2.5	12.0

All tools performance rated @ 90psi / 620 kPa air pressure.
Air inlet size: 1/4in
Standard Equipment: 600 Series Mini Angle Head with 1/4”-28 internal thread

15LN Series - Right Angle Drill - Heavy Duty Head

0.9hp / 0.67kW
540-3900rpm
Ideal for Restricted Access Applications

- -52 1/4”-28 Internal thread standard
- Other terminations Available:
  -51 10-32 Internal Thread
  -53 Threaded Collet
  -54 5/16”-24 Internal Thread
  -55 3/8”-24 Internal Thread
  -59NC 3/8”-24 External Thread
- Other Angle Heads Available:
  -6X Light Duty
  -7X Compact Style
  -4X 45 degree Angle Head
  -9X 360 degree Angle Head
- Rear Exhaust
- Lock off safety lever standard

MODEL	TERMINATION	SPEED	WEIGHT	LENGTH
		R/MIN	LB	IN
15LN286-52	1/4”-28 I	540	3.09	12.8
15LN285-52	1/4”-28 I	870	3.09	12.8
15LN284-52	1/4”-28 I	1070	3.09	12.8
15LN283-52	1/4”-28 I	1300	2.65	11.5
15LN281-52	1/4”-28 I	3500	2.65	11.5
15LN288-52	1/4”-28 I	3900	2.65	11.5

All tools performance rated @ 90psi / 620 kPa air pressure.
Air inlet size: 1/4in
Standard Equipment: 500 Series Heavy Duty Angle Head with 1/4”-28

15LQ Series - Right Angle Drill - Quick Change Indexable Heads

15LF 0.4hp/0.3kW, 15LN 0.9hp/0.67kW - Ideal for Application Kits

- Indexable with Quick Release for Range of Angle Head Attachments shown below
- Lock off safety lever standard

MODEL	TERMINATION	SPEED	WEIGHT	AIR INLET SIZE
		R/MIN	LB	IN
15LF287Q	Q ANGLE HEAD	420 WITH -5X HEADS/600 ALL OTHERS	1.43	1/4
15LF286Q	Q ANGLE HEAD	525 WITH -5X HEADS/750 ALL OTHERS	1.43	1/4
15LF285Q	Q ANGLE HEAD	700 WITH -5X HEADS/1000 ALL OTHERS	1.43	1/4
15LF284Q	Q ANGLE HEAD	1700 WITH -5X HEADS/2400 ALL OTHERS	1.43	1/4
15LF283Q	Q ANGLE HEAD	2300 WITH -5X HEADS/3300 ALL OTHERS	1.43	1/4
15LF282Q	Q ANGLE HEAD	2800 WITH -5X HEADS/4000 ALL OTHERS	1.43	1/4
15LF281Q	Q ANGLE HEAD	3700 WITH -5X HEADS/5300 ALL OTHERS	1.43	1/4
15LN287Q	Q ANGLE HEAD	320 WITH -5X HEADS/460 ALL OTHERS	2.35	1/4
15LN286Q	Q ANGLE HEAD	540 WITH -5X HEADS/770 ALL OTHERS	2.35	1/4
15LN285Q	Q ANGLE HEAD	870 WITH -5X HEADS/1240 ALL OTHERS	2.35	1/4
15LN284Q	Q ANGLE HEAD	1070 WITH -5X HEADS/1530 ALL OTHERS	2.35	1/4
15LN283Q	Q ANGLE HEAD	1300 WITH -5X HEADS/1850 ALL OTHERS	2.35	1/4
15LN282Q	Q ANGLE HEAD	2170 WITH -5X HEADS/3100 ALL OTHERS	2.35	1/4
15LN281Q	Q ANGLE HEAD	3500 WITH -5X HEADS/5000 ALL OTHERS	2.35	1/4

Q Indexable Quick Change Angle Head Options - Dotco

- Indexable with Quick Release for Use with 15L..Q Power Units
- -Q5 Heads 90 Degree Heavy Duty, -Q6 and Q7 light duty/compact heads
- -Q4 Heads 45 Degree, - Q9 360 degree head
- 1/4”-28 Internal Thread for Threaded Cutters
- 9/32”-40 Internal Thread for Threaded Collets

MODEL	DESCRIPTION	SPINDLE SIZE
302206PT-Q42	45° ANGLE HEAD	1/4”-28 INTERNAL THREAD
302206PT-Q43	45° ANGLE HEAD	9/32”-40 INTERNAL THREAD
302206PT-Q52	HEAVY DUTY ANGLE HEAD - 500 SERIES	1/4”-28 INTERNAL THREAD
302206PT-Q53	HEAVY DUTY ANGLE HEAD - 500 SERIES	9/32”-40 INTERNAL THREAD
302206PT-Q59	HEAVY DUTY ANGLE HEAD - 500 SERIES	3/8”-24 EXTERNAL THREAD
302206PT-Q62	MINI ANGLE HEAD - 600 SERIES	1/4”-28 INTERNAL THREAD
302206PT-Q63	MINI ANGLE HEAD - 600 SERIES	9/32”-40 INTERNAL THREAD
302206PT-Q72	COMPACT ANGLE HEAD - 700 SERIES	1/4”-28 INTERNAL THREAD
302206PT-Q73	COMPACT ANGLE HEAD - 700 SERIES	9/32”-40 INTERNAL THREAD
302206PT-Q92	360° ANGLE HEAD	1/4”-28 INTERNAL THREAD
302206PT-Q93	360° ANGLE HEAD	9/32”-40 INTERNAL THREAD

15L Series - Compact Angle Head

- Compact short reach angle head for restricted access applications
- -71 10-32 Internal Thread for Direct Cutter Mount
- -72 1/4”-28 Internal Thread For Direct Cutter Mount and Collet Adaptor Option 14-1569 (Mini Collet) Max 1/4”/6.4mm
- -73 Threaded Collet Max #10/5mm - Collets Ordered Seperately

MODEL	DESCRIPTION	TOOL TERMINATION	SPINDLE SIZE
1021620	HEAVY DUTY ANGLE HEAD - 500 SERIES	-59NC	3/8”-24 EXTERNAL THREAD
1025328	MINI ANGLE HEAD - 600 SERIES	-64	5/16”-24 INTERNAL THREAD
1025476	COMPACT ANGLE HEAD - 700 SERIES	-73	9/32”-40 INTERNAL THREAD
1025477	COMPACT ANGLE HEAD - 700 SERIES	-72	1/4”-28 INTERNAL THREAD
1025668	COMPACT ANGLE HEAD - 700 SERIES	-74	5/16”-24 INTERNAL THREAD

These drill attachments can be ordered as a separate accessory item or as part of a complete model. To order as a complete model, use the basic model number from the appropriate 15LF, 15LS, or 15LN catalog page and replace the termination number -32 for example with the termination number of the desired optional attachment -71 for example from this page.

15L Series - Light Duty Angle Head

- -61 10-32 Internal Thread for Direct Cutter Mount
- -62 1/4”-28 Internal Thread For Direct Cutter Mount and Collet Adaptor Option 14-1569 (Mini Collet) Max 1/4”/6.4mm
- -63 Threaded Collet Max #10/5mm - Collets Ordered Seperately
- -64 5/16”-24 Internal Thread

MODEL	DESCRIPTION	TOOL TERMINATION	SPINDLE SIZE
1025313	MINI ANGLE HEAD - 600 SERIES	-63	9/32”-40 INTERNAL THREAD
1025314	MINI ANGLE HEAD - 600 SERIES	-61	#10-32 INTERNAL THREAD
1025409	MINI ANGLE HEAD - 600 SERIES	-62	1/4”-28 INTERNAL THREAD

These drill attachments can be ordered as a separate accessory item or as part of a complete model. To order as a complete model, use the basic model number from the appropriate 15LF, 15LS, or 15LN catalog page and replace the termination number -32 for example with the termination number of the desired optional attachment -71 for example from this page.

15L Series - Heavy Duty Angle Head

- -52 1/4”-28 Internal Thread For Direct Cutter Mount and Collet Adaptor Option 14-1569 (Mini Collet) Max 1/4”/6.4mm
- -53 Threaded Collet Max #10/5mm - Collets Ordered Seperately
- -54 5/16”-24 Internal Thread
- -59NC 3/8”-24 External Thread for chuck or collet adaptor mounting

MODEL	DESCRIPTION	TOOL TERMINATION	SPINDLE SIZE
1021289	HEAVY DUTY ANGLE HEAD - 500 SERIES	-52	1/4”-28 INTERNAL THREAD
1021291	HEAVY DUTY ANGLE HEAD - 500 SERIES	-54	5/16”-24 INTERNAL THREAD
1021292	HEAVY DUTY ANGLE HEAD - 500 SERIES	-53	9/32”-40 INTERNAL THREAD
1025780	HEAVY DUTY ANGLE HEAD - 500 SERIES	-55	3/8”-24 INTERNAL THREAD

These drill attachments can be ordered as a separate accessory item or as part of a complete model. To order as a complete model, use the basic model number from the appropriate 15LF, 15LS, or 15LN catalog page and replace the termination number -32 for example with the termination number of the desired optional attachment -71 for example from this page.

15L Series - 45 Degree Angle Head

- For difficult access applications
- -42 1/4”-28 Internal Thread For Direct Cutter Mount and Collet Adaptor Option 14-1569 (Mini Collet) Max 1/4”/6.4mm
- -43 Threaded Collet Max #10/5mm - Collets Ordered Seperately
- -44 5/16”-24 Internal Thread

MODEL	DESCRIPTION	TOOL TERMINATION	SPINDLE SIZE
1025730	45° ANGLE HEAD	-42	1/4”-28 INTERNAL THREAD
1025731	45° ANGLE HEAD	-43	9/32”-40 INTERNAL THREAD
1025733	45° ANGLE HEAD	-44	5/16”-24 INTERNAL THREAD

These drill attachments can be ordered as a separate accessory item or as part of a complete model. To order as a complete model, use the basic model number from the appropriate 15LF, 15LS, or 15LN catalog page and replace the termination number -32 for example with the termination number of the desired optional attachment -71 for example from this page.

15 L Series - 360º Angle Head

- Versatile swivel head for very difficult access applications
- -91 10-32 Internal Thread for Direct Cutter Mount
- -92 1/4”-28 Internal Thread For Direct Cutter Mount and Collet Adaptor Option 14-1569 (Mini Collet) Max 1/4”/6.4mm

MODEL	DESCRIPTION	TOOL TERMINATION	SPINDLE SIZE
1025694	360° ANGLE HEAD	-92	1/4”-28 INTERNAL THREAD
1025696	360° ANGLE HEAD	-91	#10-32 INTERNAL THREAD

These drill attachments can be ordered as a separate accessory item or as part of a complete model. To order as a complete model, use the basic model number from the appropriate 15LF, 15LS, or 15LN catalog page and replace the termination number -32 for example with the termination number of the desired optional attachment -71 for example from this page

Collets

For use on Cleco Dotco 15LF, 15LS & 15LN right angle drills with 9/32”-40 spindles.

- For use on Cleco Dotco 15LF, 15LS & 15LN right angle drills with 9/32”-40 spindles.
- (Termination codes: - 43, -53, -63, -73, & -93)

MODEL	DRILL SIZE		
	NO	IN	MM
1006408	53	0.0595	
1005180	1/16	0.0625	
316PT		0.0630	1.6
1006412	51	0.0670	1.7
320PT		0.0787	2
1005875	46	0.0830	
1005182	3/32	0.0938	2.4
324PT		0.0945	
1005684	40	0.0980	2.5
325PT		0.0984	
1006395	39	0.0995	2.5
326PT		0.1024	
1005183	7/64	0.1094	2.8
330PT		0.1181	3
1005873	31	0.1200	
1005184	1/8	0.1250	3.2
332PT		0.1260	
1013904	30	0.1285	3.3
333PT		0.1299	
1005185	9/64	0.1406	
1005872	27	0.1440	
1006373	26	0.1470	
1005186	5/32	0.1563	
1005926	22	0.1570	4.0
340PT		0.1575	
1005682	21	0.1590	
1005876	20	0.1610	4.1
341PT		0.1614	
1006035	19	0.1650	4.2
342PT		0.1654	
1005187	11/64	0.1719	
1005977	17	0.1730	4.4
344PT		0.1732	4.4
1006346	16	0.1770	
345PT		0.1772	4.5
1005927	13	0.1850	
347PT		0.1850	4.7
1005188	3/16	0.1875	
1005871	12	0.1890	
348PT		0.1890	4.8
1005681	10	0.1910	
1006001	11	0.1935	
350PT		0.1969	5

Other sizes available, please contact Cleco Production Tools

Jacobs Chucks

Keyed and Keyless up to 1/2” Capacity

•

MODEL	DESCRIPTION	CAPACITY	TERM.
		IN	IN
1075	OB	5/32	5/16”-24
1001505	7 BA	1/4	3/8”-24
1005078	1 BA	1/4	3/8”-24
33633	KEYLESS	5/16	3/8”-24
1001252	41 BA (MED. DUTY)	3/8	3/8”-24
100442-2	2 BA (MED. DUTY)	3/8	3/8”-24
1110945	KEYLESS (31073)	3/8	3/8”-24
863420	22 BA (LIGHT DUTY)	3/8	3/8”-24
33663D	KEYLESS	25/64	3/8”-24
1009726	33 BA	1/2	3/8”-24

300 Series - Collet Chuck

Up to 1/4” Capacity

- Use with Standard Collet: 1/4” (#308).
- Termination Number: -36

MODEL	DESCRIPTION
14-1148	1/64”-1/4” CAPACITY WITH A 5/16”-24 FEMALE THREAD

QRA Series - Quick Change Chuck

For 3/8”-24 Thread | 1/4” Hex

MODEL	DESCRIPTION	SPINDLE SIZE	CHUCK SIZE
		IN	IN
849414	FOR 3/8”-24 THREAD | 1/4” HEX	3/8”-24	1/4

TULMan Electronic Counter

Cycle or Run Time Counter for Small Pneumatic Tools Up to 20cfm / 570 lpm

- First ever odometer and tripometer for small pneumatic tools
- Useable on any small pneumatic device with suitable air flow, including Cleco & Dotco products
- Manage tool service and tool calibration, quantify & compare tool consumable life
- Monitor workforce productivity, improve quality of product or process and realize cost savings
- LED indicator lights blink yellow (warning) and red as cycle and run time limits are reached.
- Easy-to-use monitoring software included
- Tamper-proof cover for micro-USB access

MODEL	MAX PRESSURE	MAX FLOW	MIN FLOW	WEIGHT
	LB/IN² I BAR	CFM I L/MIN	CFM I L/MIN	LB
240461PT	100 LB/IN² | 6.9 BAR	20 | 570	5 | 145	0.176

Straight Shank Drill Adaptors

For use with Cleco Dotco 15LF, 15LS & 15LN right angle drills with 1/4”-28 spindles.

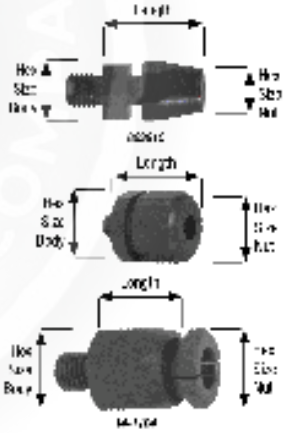

- For use on Cleco 15LF, 15LS & 15LN right angle drills
- Adapts 1/4”-28 output to collet/chuck for straight shank drills

MODEL	DESCRIPTION	SHANK DIAMETER CAPACITY	LENGTH	HEX SIZE BODY/NUT
			IN	IN
1020699	CONE JAW CHUCK	.040 IN | 1/4 IN	0.9 IN	0.75 / 0.75
14-0158	MINI CHUCK - COLLET ONLY	1/8 IN	0.65 IN	
14-1102	MINI CHUCK - ASSEMBLY	1/8 IN	0.65 IN	0.437 / 0.375
14-1568	MINI CHUCK - ADAPTOR ONLY	1/8 IN	0.65 IN	
863810	MINI COLLET NUT	3/16 IN	0.8 IN	0.500 / 0.500
14-0168	MINI CHUCK - COLLET ONLY	1/4 IN	0.7 IN	
14-1104	MINI CHUCK - ASSEMBLY	1/4 IN	0.7 IN	0.500 / 0.437
14-1569	MINI CHUCK - ADAPTOR ONLY	1/4 IN	0.7 IN	
863806	MINI COLLET NUT	1/4 IN	0.8 IN	0.500 / 0.500
14-0170	MINI CHUCK - COLLET ONLY	6 MM	0.7 IN	
14-1094	MINI CHUCK - ASSEMBLY	6 MM	0.7 IN	0.500 / 0.437

RB106 - Flat Offset Angle Drill

Use in Pistol Drills for Difficult Access Applications

- 10-32 thread for cutter attachment
- 6mm/0.236” Shank Diameter
- Recommended maximum drilling capacity 5mm/0.197” in Aluminium
- Recommended maximum countersinking capacity 10mm/0.394” in Aluminium

MODEL	A	B	WEIGHT	
			LB	G
10080005	84	28	0.220	100
10080010	84	112.5	0.397	180
10080015	63	28	0.287	130
10080020	63	112.5	0.49	220

Cutters for Flat Offset Angle Drill

- These cutters are designed for use with the flat offset angle drill RB 106 with UNF 10-32 F spindle thread.
- Recommended for use with Dotco hand drills
- Can be used in aluminum

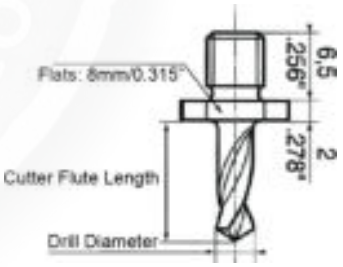

MODEL	DRILL DIAMETER		CUTTER FLUTE LENGTH	
	MM	IN	IN	MM
33000020	2.5	0.098	0.472	12
33000625	2.5	0.098	0.79	20
33000025	3	0.118	0.472	12
33000132	3.2	0.126	0.315	8
33000030	3.2	0.126	0.472	12
33000632	3.2	0.126	0.79	20
33000040	4	0.157	0.472	12
33000240	4	0.157	0.59	15
33000248	4.8	0.189	0.59	15

RB1130/60QBSF/70QBSF - Manual Back Spotfacer

Fixed Speed 0.6hp / 0.4kW 460rpm
Variable Speed 0.7hp / 0.5kW 150-550rpm

- Specially designed for all back-spotfacing operations with an accuracy of 001" / .025mm micro adjustment
- Fixed speed (RB 1130 | 60QBSF) or adjustable speed (RB 1130-2 | 70QBSF) for use in light alloys or steel
- Machine design provides smooth and easy feed without strain on the operator
- Wide range of interchangeable collets
- Feed lever with 360° orientation
- Wide range of cutters available - threaded or with quick bayonet lock

MODEL	MOTOR	SPEED	FIXTURING	ACCESSORIES	STROKE	WEIGHT
	CONFIGURATION	R/MIN	OPTIONS		IN I MM	LB
60QBSF/ RB1130-1	PISTOL GRIP	500	NA	•SPINDLE COLLET •SPINDLE PILOT •BACK SPOT FACING CUTTERS	0.394 | 10.0	4.9
70QVBSF/ RB1130-2	PISTOL GRIP	150-550	NA	•SPINDLE COLLET •SPINDLE PILOT •BACK SPOT FACING CUTTERS	0.591 | 15.0	5.5

Air Pressure: 90psi | 6.3bar
Recommended Hose Size: 3/8in | 10mm

Standard Collets

MODEL	DIAMETER	
	IN	MM
70110200	0.0787	2
70110250	0.098	2.5
70110300	0.1181	3
70110350		3.5
70110400	5/32	4
70110480	3/16	4.8
70110500	0.1968	5
70110550		5.5
70110600	0.2362	6
70110635	1/4	6.35
70110794	5/16	7.94
70110952	3/8	9.52

Alternate collet diameters available upon request.

RB 156 - Microstop Cage

Stroke 3.5mm/0.14in
Cutter Thread M6 x 1

- Cemented, hardened and ground chrome-nickel steel spindle mounted on a self lubrificating bronze body and a thrust bearing.
- Centring-cone of the cutter (120°) for perfect concentricity.
- Microstop depth adjustment (1 scale division = .001”).
- Microstop depth setting is held securely in place by locknut with seal. This patented feature allows an easy loosening of the lock-nut without damage to the drill cage.

MODEL	INPUT STYLE	SHANK		CUTTER	STROKE	VACUUM	MOUNTING	WINDOW	NOSE INSERT	DIAMETER MAX.	OVERALL LENGTH MAX	OVERALL LENGTH MIN	WEIGHT
		IN	MM	THREAD	MM		BASE STYLE	SIZE	STYLE	MM	MM	MM	G
10000010	FIXED SHANK	0.189	4.8	M6 X 1	3.5	NO	TAPPED M19F FOR NOSE	SMALL	NYLON	25	55	51	75
100000100	FIXED SHANK	0.189	4.8	M6 X 1	3.5	NO	OFFSET MOUNTING BASE	SMALL	NONE	25	55	51	75
10000010W	FIXED SHANK	0.189	4.8	M6 X 1	3.5	NO	TAPPED M19F FOR NOSE	LARGE	NYLON	25	55	51	75
100000100 W	FIXED SHANK	0.189	4.8	M6 X 1	3.5	NO	OFFSET MOUNTING BASE	LARGE	NONE	25	55	51	75

RB206 & RB(I) 206 Microstop Cage

Stroke 6mm/0.24in
Cutter Thread RB 206 M6 x 1 RBI 206 1/4”-28

- Different mounting bases available
- For composites mounting base with vacuum
- Cemented, hardened and ground chrome-nickel steel spindle mounted on a self lubrificating bronze body and a thrust bearing.
- Centring-cone of the cutter (120°) for perfect concentricity.
- Microstop depth adjustment (1 scale division = .001”).
- Microstop depth setting is held securely in place by locknut with seal. This patented feature allows an easy loosening of the lock-nut without damage to the drill cage.

MODEL	INPUT STYLE	SHANK		CUTTER	STROKE	VACUUM	MOUNTING	WINDOW	NOSE INSERT	DIAMETER MAX.	OVERALL LENGTH MAX	OVERALL LENGTH MIN	WEIGHT
		IN	MM	THREAD	MM		BASE STYLE	SIZE	STYLE	MM	MM	MM	G
10005355W	FIXED SHANK	0.236	6.0	1/4”-28	6	NO	TAPPED M16F FOR NOSE	LARGE	NYLON	21	101	95	120
10005355	FIXED SHANK	0.236	6.0	1/4”-28	6	NO	TAPPED M16F FOR NOSE	SMALL	NYLON	21	101	95	120
10005050W	FIXED SHANK	0.236	6.0	1/4”-28	6	NO	NONE/FLAT BASE	LARGE	NONE	21	101	95	120
10005050	FIXED SHANK	0.236	6.0	1/4”-28	6	NO	NONE/FLAT BASE	SMALL	NONE	21	101	95	120
10005250W	FIXED SHANK	0.236	6.0	1/4”-28	6	YES	NONE/OFFSET BASE	LARGE	NONE	21	101	95	120
10005250	FIXED SHANK	0.236	6.0	1/4”-28	6	NO	NONE/OFFSET BASE	SMALL	NONE	21	101	95	120
10005356W	FIXED SHANK	0.236	6.0	1/4”-28	6	YES	TAPPED M16F FOR NOSE	LARGE	NONE	21	101	95	120
10005356	FIXED SHANK	0.236	6.0	1/4”-28	6	YES	TAPPED M16F FOR NOSE	SMALL	NONE	21	101	95	120
10005051W	FIXED SHANK	0.236	6.0	1/4”-28	6	YES	NONE/FLAT BASE	LARGE	NONE	21	101	95	120
10005051	FIXED SHANK	0.236	6.0	1/4”-28	6	YES	NONE/FLAT BASE	SMALL	NONE	21	101	95	120
10005305W	FIXED SHANK	0.236	6.0	M6 X 1	6	NO	TAPPED M16F FOR NOSE	LARGE	NYLON	21	101	95	120
10005305	FIXED SHANK	0.236	6.0	M6 X 1	6	NO	TAPPED M16F FOR NOSE	SMALL	NYLON	21	101	95	120
10005000W	FIXED SHANK	0.236	6.0	M6 X 1	6	NO	NONE/FLAT BASE	LARGE	NONE	21	101	95	120
10005000	FIXED SHANK	0.236	6.0	M6 X 1	6	NO	NONE/FLAT BASE	SMALL	NONE	21	101	95	120
10005200W	FIXED SHANK	0.236	6.0	M6 X 1	6	NO	NONE/OFFSET BASE	LARGE	NONE	21	101	95	120
10005200	FIXED SHANK	0.236	6.0	M6 X 1	6	NO	NONE/OFFSET BASE	SMALL	NONE	21	101	95	120
10005306W	FIXED SHANK	0.236	6.0	M6 X 1	6	YES	TAPPED M16F FOR NOSE	LARGE	NONE	21	101	95	120
10005306	FIXED SHANK	0.236	6.0	M6 X 1	6	YES	TAPPED M16F FOR NOSE	SMALL	NONE	21	101	95	120
10005001W	FIXED SHANK	0.236	6.0	M6 X 1	6	YES	NONE/FLAT BASE	LARGE	NONE	21	101	95	120
10005001	FIXED SHANK	0.236	6.0	M6 X 1	6	YES	NONE/FLAT BASE	SMALL	NONE	21	101	95	120

RB 256 & RB(I)256 - Microstop Cage

Stroke 7.5mm/0.30in
Cutter Thread RB 206 M6x1 RB(I) 206 1/4”-28

- Different mounting bases available
- For special composites mounting base with vacuum
- Cemented, hardened and ground chrome-nickel steel spindle mounted on a self lubrificating bronze body and a thrust bearing.
- Centring-cone of the cutter (120°) for perfect concentricity.
- Microstop depth adjustment (1 scale division = .001”).
- Microstop depth setting is held securely in place by locknut with seal. This patented feature allows an easy loosening of the lock-nut without damage to the drill cage.

MODEL	INPUT STYLE	SHANK		CUTTER	STROKE	VACUUM	MOUNTING	WINDOW	NOSE INSERT	DIAMETER MAX.	OVERALL LENGTH MAX	OVERALL LENGTH MIN	WEIGHT
		IN	MM	THREAD	MM		BASE STYLE	SIZE	STYLE	MM	MM	MM	G
10010110W	FIXED SHANK	0.236	6.0	1/4”-28	7.5	NO	M19F	LARGE	HARD CHROME	28	98	91	175
10010110	FIXED SHANK	0.236	6.0	1/4”-28	7.5	NO	M19F	SMALL	HARD CHROME	28	98	91	175
10010111W	FIXED SHANK	0.236	6.0	1/4”-28	7.5	YES	M19F	LARGE	HARD CHROME	28	98	91	175
10010111	FIXED SHANK	0.236	6.0	1/4”-28	7.5	YES	M19F	SMALL	HARD CHROME	28	98	91	175
10010115W	FIXED SHANK	0.236	6.0	1/4”-28	7.5	NO	M19F	LARGE	NYLON	28	98	91	175
10010115	FIXED SHANK	0.236	6.0	1/4”-28	7.5	NO	M19F	SMALL	NYLON	28	98	91	175
10010116W	FIXED SHANK	0.236	6.0	1/4”-28	7.5	YES	M19F	LARGE	NYLON	28	98	91	175
10010116	FIXED SHANK	0.236	6.0	1/4”-28	7.5	YES	M19F	SMALL	NYLON	28	98	91	175
10010010W	FIXED SHANK	0.236	6.0	M6 X 1	7.5	NO	M19F	LARGE	HARD CHROME	28	98	91	175
10010010	FIXED SHANK	0.236	6.0	M6 X 1	7.5	NO	M19F	SMALL	HARD CHROME	28	98	91	175
10010001W	FIXED SHANK	0.236	6.0	M6 X 1	7.5	YES	M19F	LARGE	HARD CHROME	28	98	91	175
10010001	FIXED SHANK	0.236	6.0	M6 X 1	7.5	YES	M19F	SMALL	HARD CHROME	28	98	91	175
10010015W	FIXED SHANK	0.236	6.0	M6 X 1	7.5	NO	M19F	LARGE	NYLON	28	98	91	175
10010015	FIXED SHANK	0.236	6.0	M6 X 1	7.5	NO	M19F	SMALL	NYLON	28	98	91	175
10010016W	FIXED SHANK	0.236	6.0	M6 X 1	7.5	YES	M19F	LARGE	NYLON	28	98	91	175
10010016	FIXED SHANK	0.236	6.0	M6 X 1	7.5	YES	M19F	SMALL	NYLON	28	98	91	175
10010205W	FIXED SHANK	0.236	6.0	M6 X 1	7.5	YES	M30 X 1M	LARGE	NYLON	28	98	91	175
10010205	FIXED SHANK	0.236	6.0	M6 X 1	7.5	YES	M30 X 1M	SMALL	NYLON	28	98	91	175

RB 257 - Microstop Cage

Stroke 6mm/0.24”
Cutter Thread M6 x 1

- Different mounting bases available
- For composites mounting base with vacuum
- High precision microstop cage, body in heat treated chrome steel, fully ground throughout. This ball mounted microstop cage includes two needle bearings for best utilisation.
- When using the RB 257, any misalignment of the microstop cage is corrected by the unique ball pivoting spindle. This assembly ensures perpendicularity throughout the operation at all time.
- Centring cone of the cutter (120°) for perfect concentricity.
- Microstop depth adjustment (1 scale division = .001”).
- Microstop depth setting is held securely in place by locknut with seal. This patented feature allows an easy loosening of the lock-nut without damage to the drill cage.

MODEL	INPUT STYLE	SHANK		CUTTER	STROKE	VACUUM	MOUNTING	WINDOW	NOSE INSERT	DIAMETER MAX.	OVERALL LENGTH MAX	OVERALL LENGTH MIN	WEIGHT
		IN	MM	THREAD	MM		BASE STYLE	SIZE	STYLE	MM	MM	MM	G
10015015W	BALL PIVOT	0.236	6.0	M6 X 1	6	NO	M16F AND M26M	LARGE	HARD CHROME	29	92	88	165
10015015	BALL PIVOT	0.236	6.0	M6 X 1	6	NO	M16F AND M26M	SMALL	HARD CHROME	29	92	88	165
RC-10015020W	BALL PIVOT	0.236	6.0	M6 X 1	6	NO	M16F AND M26M	LARGE	NYLON	29	92	88	165
RC-10015020	BALL PIVOT	0.236	6.0	M6 X 1	6	NO	M16F AND M26M	SMALL	NYLON	29	92	88	165
10015010W	BALL PIVOT	0.236	6.0	M6 X 1	6	NO	M16F AND M26M	LARGE	ROTARY CELORON	29	92	88	165
10015010	BALL PIVOT	0.236	6.0	M6 X 1	6	NO	M16F AND M26M	SMALL	ROTARY CELORON	29	92	88	175
10015200W	BALL PIVOT	0.236	6.0	M6 X 1	6	NO	THREE NYLON PADS	LARGE	NONE	29	92	88	165
10015200	BALL PIVOT	0.236	6.0	M6 X 1	6	NO	THREE NYLON PADS	SMALL	NONE	29	92	88	165
10015016W	BALL PIVOT	0.236	6.0	M6 X 1	6	YES	M16F AND M26M	LARGE	HARD CHROME	29	92	88	165
10015016	BALL PIVOT	0.236	6.0	M6 X 1	6	YES	M16F AND M26M	SMALL	HARD CHROME	29	92	88	165
10015021W	BALL PIVOT	0.236	6.0	M6 X 1	6	YES	M16F AND M26M	LARGE	CELORON	29	92	88	165
10015021	BALL PIVOT	0.236	6.0	M6 X 1	6	YES	M16F AND M26M	SMALL	CELORON	29	92	88	165
10015001W	BALL PIVOT	0.236	6.0	M6 X 1	6	YES	M16F AND M26M	LARGE	ROTARY CELORON	29	92	88	165
10015001	BALL PIVOT	0.236	6.0	M6 X 1	6	YES	M16F AND M26M	SMALL	ROTARY CELORON	29	92	88	165

RB(I) 258 - Microstop Cage

Stroke 27mm/1.06”
Cutter Thread M8 x 1 or 1/4”-28

- High precision microstop cage, body in heat treated chrome steel, fully ground throughout. This ball mounted microstop cage
- includes two needle bearings for best utilisation.
- When using the RB 258, any misalignment of the microstop cage is corrected by the unique ball pivoting spindle. This assembly ensures perpendicularity throughout the operation at all time.
- Centring cone of the cutter (120°) for perfect concentricity.
- Microstop depth adjustment (1 scale division = .001”).
- Microstop depth setting is held securely in place by locknut with seal. This patented feature allows an easy loosening of the lock-nut without damage to the drill cage.

MODEL	INPUT STYLE	SHANK		CUTTER	STROKE	VACUUM	MOUNTING	WINDOW	NOSE INSERT	DIAMETER MAX.	OVERALL LENGTH MAX	OVERALL LENGTH MIN	WEIGHT
		IN	MM	THREAD	MM		BASE STYLE	SIZE	STYLE	MM	MM	MM	G
10015500W	BALL PIVOT	0.250	6.35	M6 X 1	27	NO	TAPPED M19F FOR NOSE	LARGE		29	156	141	250
10015500PT	BALL PIVOT	0.250	6.35	M6 X 1	27	NO	TAPPED M19F FOR NOSE	SMALL	NYLON	29	156	141	250
10015550W	BALL PIVOT	0.250	6.35	1/4”-28	27	NO	TAPPED M19F FOR NOSE	LARGE		29	156	141	250
10015550	BALL PIVOT	0.250	6.35	1/4”-28	27	NO	TAPPED M19F FOR NOSE	SMALL	NYLON	29	156	141	250

RB 306 - Microstop Cage

Stroke 7.5mm/0.3”
Cutter Thread M8 x 1

- Different mounting bases available
- This cage has been designed for use with cutters greater than 0.394” dia.
- For special composites mounting base with vacuum
- Cemented, hardened and ground chrome-nickel steel spindle mounted on a self lubrificating bronze body and a thrust bearing.
- Centring-cone of the cutter (120°) for perfect concentricity.
- Microstop depth adjustment (1 scale division = .001”).
- Microstop depth setting is held securely in place by locknut with seal. This patented feature allows an easy loosening of the lock-nut without damage to the drill cage.

MODEL	INPUT STYLE	SHANK		CUTTER	STROKE	VACUUM	MOUNTING	WINDOW	NOSE INSERT	DIAMETER MAX.	OVERALL LENGTH MAX	OVERALL LENGTH MIN	WEIGHT
		IN	MM	THREAD	MM		BASE STYLE	SIZE	STYLE	MM	MM	MM	G
10025105W	FIXED SHANK	0.236	6	M8 X 1	7.5	NO	M30M	LARGE	HARD CHROME	28	98	91	185
10025105	FIXED SHANK	0.236	6	M8 X 1	7.5	NO	M30M	SMALL	HARD CHROME	28	98	91	185
RC-10025010W	FIXED SHANK	0.236	6	M8 X 1	7.5	NO	M26M	LARGE	HARD CHROME	28	98	91	185
RC-10025010	FIXED SHANK	0.236	6	M8 X 1	7.5	NO	M26M	SMALL	HARD CHROME	28	98	91	185
10025110W	FIXED SHANK	0.236	6	M8 X 1	7.5	NO	M30M	LARGE	NYLON	28	98	91	185
10025110	FIXED SHANK	0.236	6	M8 X 1	7.5	NO	M30M	SMALL	NYLON	28	98	91	185
RC-10025015W	FIXED SHANK	0.236	6	M8 X 1	7.5	NO	M26M	LARGE	NYLON	28	98	91	185
RC_10025015	FIXED SHANK	0.236	6	M8 X 1	7.5	NO	M26M	SMALL	NYLON	28	98	91	185
10025117W	FIXED SHANK	0.236	6	M8 X 1	7.5	YES	M30M	LARGE	HARD CHROME	28	98	91	185
10025117	FIXED SHANK	0.236	6	M8 X 1	7.5	YES	M30M	SMALL	HARD CHROME	28	98	91	185
10025001W	FIXED SHANK	0.236	6	M8 X 1	7.5	YES	M26M	LARGE	HARD CHROME	28	98	91	185
10025001	FIXED SHANK	0.236	6	M8 X 1	7.5	YES	M26M	SMALL	HARD CHROME	28	98	91	185
10025111W	FIXED SHANK	0.236	6	M8 X 1	7.5	YES	M30M	LARGE	NYLON	28	98	91	185
10025111	FIXED SHANK	0.236	6	M8 X 1	7.5	YES	M30M	SMALL	NYLON	28	98	91	185
10025016W	FIXED SHANK	0.236	6	M8 X 1	7.5	YES	M26M	LARGE	NYLON	28	98	91	185
10025016	FIXED SHANK	0.236	6	M8 X 1	7.5	YES	M26M	SMALL	NYLON	28	98	91	185
10025116W	FIXED SHANK	0.236	6	M8 X 1	7.5	YES	M30M	LARGE	ROTARY CELORON	28	98	91	185
10025116	FIXED SHANK	0.236	6	M8 X 1	7.5	YES	M30M	SMALL	ROTARY CELORON	28	98	91	185

RB(I) 307 - Microstop Cage

Stroke 7mm/0.3”
Cutter Thread M8 x 1 or 1/2”-28

- Different mounting bases available
- Reduced dimensions for tight access areas
- For special composites mounting base with vacuum
- High precision microstop cage, body in heat treated chrome steel, fully ground throughout. This ball mounted microstop cage includes two needle bearings for best utilisation.
- When using the RB 307, any misalignment of the microstop cage is corrected by the unique ball pivoting spindle. This assembly ensures perpendicularity throughout the operation at all time.
- Centring cone of the cutter (120°) for perfect concentricity.
- Microstop depth adjustment (1 scale division = .001”).
- Microstop depth setting is held securely in place by locknut with seal. This patented feature allows an easy loosening of the lock-nut without damage to the drill cage.

MODEL	INPUT STYLE	SHANK		CUTTER	STROKE	VACUUM	MOUNTING	WINDOW	NOSE INSERT	DIAMETER MAX.	OVERALL LENGTH MAX	OVERALL LENGTH MIN	WEIGHT
		IN	MM	THREAD	MM		BASE STYLE	SIZE	STYLE	MM	MM	MM	G
10020160W	BALL PIVOT	0.236	6	1/4”-28	7	NO	M19F AND M26M	LARGE	HARD CHROME	29	98	88	165
10020160	BALL PIVOT	0.236	6	1/4”-28	7	NO	M19F AND M26M	SMALL	HARD CHROME	29	98	88	165
10020065W	BALL PIVOT	0.236	6	1/4”-28	7	NO	M19F AND M26M	LARGE	HARD CHROME	29	98	88	165
10020065	BALL PIVOT	0.236	6	1/4”-28	7	NO	M19F AND M26M	SMALL	HARD CHROME	29	98	88	165
10020070W	BALL PIVOT	0.236	6	1/4”-28	7	NO	M19F AND M26M	LARGE	NYLON	29	98	88	165
10020070	BALL PIVOT	0.236	6	1/4”-28	7	NO	M19F AND M26M	SMALL	NYLON	29	98	88	165
10020060W	BALL PIVOT	0.236	6	1/4”-28	7	NO	M19F AND M26M	LARGE	ROTARY CELERON	29	98	88	165
10020060	BALL PIVOT	0.236	6	1/4”-28	7	NO	M19F AND M26M	SMALL	ROTARY CELERON	29	98	88	165
10020155W	BALL PIVOT	0.236	6	1/4”-28	7	NO	M19F AND M26M	LARGE	ROTARY CELERON	29	98	88	165
10020155	BALL PIVOT	0.236	6	1/4”-28	7	NO	M19F AND M26M	SMALL	ROTARY CELERON	29	98	88	165
10020250W	BALL PIVOT	0.236	6	1/4”-28	7	NO	3 NYLON PADS	LARGE	NONE	29	98	88	165

MODEL	INPUT STYLE	SHANK		CUTTER	STROKE	VACUUM	MOUNTING	WINDOW	NOSE INSERT	DIAMETER MAX.	OVERALL LENGTH MAX	OVERALL LENGTH MIN	WEIGHT
		IN	MM	THREAD	MM		BASE STYLE	SIZE	STYLE	MM	MM	MM	G
10020250	BALL PIVOT	0.236	6	1/4"-28	7	NO	3 NYLON PADS	SMALL	NONE	29	98	88	165
10020165W	BALL PIVOT	0.236	6	1/4"-28	7	NO	M19F AND M26M	LARGE	NYLON	29	98	88	165
10020165	BALL PIVOT	0.236	6	1/4"-28	7	NO	M19F AND M26M	SMALL	NYLON	29	98	88	165
10020166W	BALL PIVOT	0.236	6	1/4"-28	7	YES	M19F AND M26M	LARGE	NYLON	29	98	88	165
10020166	BALL PIVOT	0.236	6	1/4"-28	7	YES	M19F AND M26M	SMALL	NYLON	29	98	88	165
10020110W	BALL PIVOT	0.236	6	M8 X 1	7	NO	M19F AND M26M	LARGE	HARD CHROME	29	98	88	165
10020110	BALL PIVOT	0.236	6	M8 X 1	7	NO	M19F AND M26M	SMALL	HARD CHROME	29	98	88	165
10020015W	BALL PIVOT	0.236	6	M8 X 1	7	NO	M19F AND M26M	LARGE	HARD CHROME	29	98	88	165
10020015	BALL PIVOT	0.236	6	M8 X 1	7	NO	M19F AND M26M	SMALL	HARD CHROME	29	98	88	165
10020020W	BALL PIVOT	0.236	6	M8 X 1	7	NO	M19F AND M26M	LARGE	NYLON	29	98	88	165
10020020	BALL PIVOT	0.236	6	M8 X 1	7	NO	M19F AND M26M	SMALL	NYLON	29	98	88	165
10020115W	BALL PIVOT	0.236	6	M8 X 1	7	NO	M30M	LARGE	NYLON	29	98	88	165
10020115	BALL PIVOT	0.236	6	M8 X 1	7	NO	M30M	SMALL	NYLON	29	98	88	165
10020010W	BALL PIVOT	0.236	6	M8 X 1	7	NO	M19F AND M26M	LARGE	ROTARY CELERON	29	98	88	165
10020010	BALL PIVOT	0.236	6	M8 X 1	7	NO	M19F AND M26M	SMALL	ROTARY CELERON	29	98	88	165
10020105W	BALL PIVOT	0.236	6	M8 X 1	7	NO	M19F AND M26M	LARGE	ROTARY CELERON	29	98	88	165
10020105	BALL PIVOT	0.236	6	M8 X 1	7	NO	M19F AND M26M	SMALL	ROTARY CELERON	29	98	88	165
10020200W	BALL PIVOT	0.236	6	M8 X 1	7	NO	3 NYLON PADS	LARGE	NONE	29	98	88	165
10020200	BALL PIVOT	0.236	6	M8 X 1	7	NO	3 NYLON PADS	SMALL	NONE	29	98	88	165
1002001W	BALL PIVOT	0.236	6	M8 X 1	7	YES	M19F AND M26M	LARGE	HARD CHROME	29	98	88	165
1002001	BALL PIVOT	0.236	6	M8 X 1	7	YES	M19F AND M26M	SMALL	HARD CHROME	29	98	88	165
10020111W	BALL PIVOT	0.236	6	M8 X 1	7	YES	M19F AND M26M	LARGE	HARD CHROME	29	98	88	165
10020111	BALL PIVOT	0.236	6	M8 X 1	7	YES	M19F AND M26M	SMALL	HARD CHROME	29	98	88	165
10020021W	BALL PIVOT	0.236	6	M8 X 1	7	YES	M19F AND M26M	LARGE	NYLON	29	98	88	165
10020021	BALL PIVOT	0.236	6	M8 X 1	7	YES	M19F AND M26M	SMALL	NYLON	29	98	88	165
10020116W	BALL PIVOT	0.236	6	M8 X 1	7	YES	M30M	LARGE	NYLON	29	98	88	165
10020116	BALL PIVOT	0.236	6	M8 X 1	7	YES	M30M	SMALL	NYLON	29	98	88	165
10020001W	BALL PIVOT	0.236	6	M8 X 1	7	YES	M19F AND M26M	LARGE	ROTARY CELERON	29	98	88	165
10020001	BALL PIVOT	0.236	6	M8 X 1	7	YES	M19F AND M26M	SMALL	ROTARY CELERON	29	98	88	165
10020106W	BALL PIVOT	0.236	6	M8 X 1	7	YES	M19F AND M26M	LARGE	ROTARY CELERON	29	98	88	165
10020106	BALL PIVOT	0.236	6	M8 X 1	7	YES	M19F AND M26M	SMALL	ROTARY CELERON	29	98	88	165

RB 356 HP 21 | RBI 356 HP 21 | RB356 HPI 21 - Microstop Cage

Stroke 21mm/0.83”
Cutter Thread M6 x 1 or 1/4”-28
Input shank 7mm/0.28:, No 1 Jacobs Taper, 3/8”-24 Female Thread

- Detachable spindle adaptor provides alternative methods for use:
  - In combination with 3 jaw chuck.
  - Mounting direct onto machine spindle using No 1 Jacobs taper or 3/8”-24 Threaded Input Option. This method provides increased level of concentricity, while reducing the length and weight of the drill / tool assembly. This results in better performance, improved machining and less fatigue on the operator.
- Cemented, hardened and ground chrome-nickel steel spindle mounted on 3 needle-bearings and a thrust bearing.
- Microstop depth adjustment (1 scale division = .001”).
- Microstop depth setting is held securely in place by locknut with seal. This patented feature allows an easy loosening of the locknut without damage to the drill cage.

MODEL	INPUT STYLE	SHANK		CUTTER	STROKE	VACUUM	MOUNTING	WINDOW	NOSE INSERT	DIAMETER MAX.	OVERALL LENGTH MAX	OVERALL LENGTH MIN	WEIGHT
		IN	MM	THREAD	MM		BASE STYLE	SIZE	STYLE	MM	MM	MM	G
10040050	JT1 WITH ADAPTOR	0.28	7	1/4”-28	22	NO	NONE/FLAT BASE	SMALL	NONE	27	136	116	300
10040250W	JT1 WITH ADAPTOR	0.28	7	1/4”-28	22	NO	NONE/FLAT BASE NARROW	LARGE	NONE	27	136	116	300
10040250	JT1 WITH ADAPTOR	0.28	7	1/4”-28	22	NO	NONE/FLAT BASE NARROW	SMALL	NONE	27	136	116	300
10040260W	JT1 WITH ADAPTOR	0.28	7	1/4”-28	22	NO	NONE/FLAT BASE NARROW	LARGE	TRIPOD + 3 NYLON STUDS	27	136	116	300
10040260	JT1 WITH ADAPTOR	0.28	7	1/4”-28	22	NO	NONE	SMALL	TRIPOD + 3 NYLON STUDS	27	136	116	300
10040455W	JT1 WITH ADAPTOR	0.28	7	1/4”-28	22	NO	TAPPED M35 FOR NOSE	LARGE	NYLON	27	136	116	300
10040455	JT1 WITH ADAPTOR	0.28	7	1/4”-28	22	NO	TAPPED M35 FOR NOSE	SMALL	NYLON	27	136	116	300
10040555W	JT1 WITH ADAPTOR	0.28	7	1/4”-28	22	NO	NONE	LARGE	TRIPOD + 3 NYLON STUDS	27	136	116	300
10040650W	JT1 WITH ADAPTOR	0.28	7	1/4”-28	22	NO	NONE/FLAT BASE	LARGE	NONE	27	136	116	300

MODEL	INPUT STYLE	SHANK		CUTTER	STROKE	VACUUM	MOUNTING	WINDOW	NOSE INSERT	DIAMETER MAX.	OVERALL LENGTH MAX	OVERALL LENGTH MIN	WEIGHT
		IN	MM	THREAD	MM		BASE STYLE	SIZE	STYLE	MM	MM	MM	G
10040650	JT1 WITH ADAPTOR	0.28	7	1/4"-28	22	NO	NONE/FLAT BASE	SMALL	NONE	27	136	116	300
10040000W	JT1 WITH ADAPTOR	0.28	7	M6 X 1	22	NO	NONE/FLAT BASE	LARGE	NONE	27	136	116	300
10040200W	JT1 WITH ADAPTOR	0.28	7	M6 X 1	22	NO	NONE/FLAT BASE NARROW	LARGE	NONE	27	136	116	300
10040210W	JT1 WITH ADAPTOR	0.28	7	M6 X 1	22	NO	NONE/FLAT BASE NARROW	LARGE	NONE	27	136	116	300
10040210	JT1 WITH ADAPTOR	0.28	7	M6 X 1	22	NO	NONE/FLAT BASE NARROW	SMALL	TRIPOD + 3 NYLON STUDS	27	136	116	300
10040405W	JT1 WITH ADAPTOR	0.28	7	M6 X 1	22	NO	TAPPED M35 FOR NOSE	LARGE	NYLON	27	136	116	300
10040405	JT1 WITH ADAPTOR	0.28	7	M6 X 1	22	NO	TAPPED M35 FOR NOSE	SMALL	NYLON	27	136	116	300
10040505W	JT1 WITH ADAPTOR	0.28	7	M6 X 1	22	NO	NONE	LARGE	TRIPOD + 3 NYLON STUDS	27	136	116	300
10040505	JT1 WITH ADAPTOR	0.28	7	M6 X 1	22	NO	NONE	SMALL	TRIPOD + 3 NYLON STUDS	27	136	116	300
10040600W	JT1 WITH ADAPTOR	0.28	7	M6 X 1	22	NO	NONE/FLAT BASE	LARGE	NONE	27	136	116	300
10040720	3/8"-24	0.28	7	M6 X 1	22	NO	NONE/FLAT BASE	SMALL	NONE	27	136	116	300
10040730	3/8"-24	0.28	7	M6 X 1	22	NO	NONE	SMALL	TRIPOD + 3 NYLON STUDS	27	136	116	300
10040740	3/8"-24	0.28	7	M6 X 1	22	NO	TAPPED M35 FOR NOSE	SMALL	NYLON	27	136	116	300
10040750	3/8"-24	0.28	7	M6 X 1	22	NO	NONE	SMALL	TRIPOD + 3 NYLON STUDS	27	136	116	300
10040760	3/8"-24	0.28	7	M6 X 1	22	NO	NONE/FLAT BASE	SMALL	NONE	27	136	116	300

RB 356 HP 38 | RBI 356 HP 38 | RB 356 HPI 38 - Microstop Cage

Stroke 38mm/1.49”
Cutter Thread M6 x 1 or 1/4”-28
Input shank 7mm/0.28”, No 1 Jacobs Taper, 3/8”-24 Female Thread

- Detachable spindle adaptor provides alternative methods for use:
  - In combination with 3 jaw chuck.
  - Mounting direct onto machine spindle using No 1 Jacobs taper or 3/8”-24 Threaded Input Option. This method provides increased level of concentricity, while reducing the length and weight of the drill / tool assembly. This results in better performance, improved machining and less fatigue on the operator.
- Cemented, hardened and ground chrome-nickel steel spindle mounted on 3 needle-bearings and a thrust bearing.
- Microstop depth adjustment (1 scale division = .001”).
- Microstop depth setting is held securely in place by locknut with seal. This patented feature allows an easy loosening of the locknut without damage to the drill cage.

MODEL	INPUT STYLE	SHANK		CUTTER	STROKE	VACUUM	MOUNTING	WINDOW	NOSE INSERT	DIAMETER MAX.	OVERALL LENGTH MAX	OVERALL LENGTH MIN	WEIGHT
		IN	MM	THREAD	MM		BASE STYLE	SIZE	STYLE	MM	MM	MM	G
10045050W	JT1 WITH ADAPTOR	0.28	7	1/4”-28		NO	NONE/FLAT BASE	LARGE	NONE	27	183	168	375
10045050	JT1 WITH ADAPTOR	0.28	7	1/4”-28		NO	NONE/FLAT BASE	SMALL	NONE	27	183	168	375
10045260W	JT1 WITH ADAPTOR	0.28	7	1/4”-28		NO	NONE/FLAT BASE NARROW	LARGE	TRIPOD + 3 NYLON STUDS	27	183	168	375
10045455	JT1 WITH ADAPTOR	0.28	7	1/4”-28		NO	TAPPED M35 FOR NOSE	SMALL	NYLON	27	183	168	375
10045555	JT1 WITH ADAPTOR	0.28	7	1/4”-28		NO	NONE/FLAT BASE	SMALL	TRIPOD + 3 NYLON STUDS	27	183	168	375
10045650W	JT1 WITH ADAPTOR	0.28	7	1/4”-28		NO	NONE/FLAT BASE	LARGE	NONE	27	183	168	375
10045650	JT1 WITH ADAPTOR	0.28	7	1/4”-28		NO	NONE/FLAT BASE	SMALL	NONE	27	183	168	375
10045700W	3/8”-24			M6 X 1	38	NO	NONE/FLAT BASE	LARGE	NONE	27	183	168	375
10045720W	3/8”-24			M6 X 1	38	NO	NONE/FLAT BASE NARROW	LARGE	NONE	27	183	168	375
10045720	3/8”-24			M6 X 1	38	NO	NONE/FLAT BASE NARROW	SMALL	NONE	27	183	168	375

MODEL	INPUT STYLE	SHANK		CUTTER	STROKE	VACUUM	MOUNTING	WINDOW	NOSE INSERT	DIAMETER MAX.	OVERALL LENGTH MAX	OVERALL LENGTH MIN	WEIGHT
		IN	MM	THREAD	MM		BASE STYLE	SIZE	STYLE	MM	MM	MM	G
10045730W	3/8"-24			M6 X 1	38	NO	NONE/FLAT BASE NARROW	LARGE	TRIPOD + 3 NYLON STUDS	27	183	168	375
10045730	3/8"-24			M6 X 1	38	NO	NONE/FLAT BASE NARROW	SMALL	TRIPOD + 3 NYLON STUDS	27	183	168	375
10045740W	3/8"-24			M6 X 1	38	NO	TAPPED M35 FOR NOSE	LARGE	NYLON	27	183	168	375
10045740	3/8"-24			M6 X 1	38	NO	TAPPED M35 FOR NOSE	SMALL	NYLON	27	183	168	375
10045750W	3/8"-24			M6 X 1	38	NO	NONE/FLAT BASE	LARGE	TRIPOD + 3 NYLON STUDS	27	183	168	375
10045750	3/8"-24			M6 X 1	38	NO	NONE/FLAT BASE	SMALL	TRIPOD + 3 NYLON STUDS	27	183	168	375
10045760W	3/8"-24			M6 X 1	38	NO	NONE/FLAT BASE	LARGE	NONE	27	183	168	375
10045760	3/8"-24			M6 X 1	38	NO	NONE/FLAT BASE	SMALL	NONE	27	183	168	375
10045200W	JT1 WITH ADAPTOR	0.28	7	M6 X 1	38	NO	NONE/FLAT BASE	LARGE	NONE	27	183	168	375
10045405W	JT1 WITH ADAPTOR	0.28	7	M6 X 1	38	NO	TAPPED M35 FOR NOSE	LARGE	NYLON	27	183	168	375
10045405	JT1 WITH ADAPTOR	0.28	7	M6 X 1	38	NO	TAPPED M35 FOR NOSE	SMALL	NYLON	27	183	168	375
10045505	JT1 WITH ADAPTOR	0.28	7	M6 X 1	38	NO	NONE/FLAT BASE	SMALL	TRIPOD + 3 NYLON STUDS	27	183	168	375
10045600W	JT1 WITH ADAPTOR	0.28	7	M6 X 1	38	NO	NONE/FLAT BASE	LARGE	NONE	27	183	168	375

RB 356HP58 - Microstop Cage

Stroke 58mm/2.3”
Cutter Thread M10 x 1 and 7/16”-20

- Detachable spindle adaptor No 1 Jacobs Taper provides alternative methods for use:
  - In combination with 3 jaw chuck with 10mm/0.39” shank input.
  - Mounting direct onto machine spindle using No 1 Jacobs Taper. This method provides increased level of concentricity, while reducing the length and weight of the drill / tool assembly. This results in better performance, improved machining and less fatigue on the operator.
- Cemented, hardened and ground chrome-nickel steel spindle mounted on 3 needle-bearings and a thrust bearing.
- Microstop depth adjustment (1 scale division = .001”).
- Microstop depth setting is held securely in place by locknut with seal. This patented feature allows an easy loosening of the locknut without damage to the drill cage.

MODEL	INPUT STYLE	SHANK		CUTTER	STROKE	VACUUM	MOUNTING	WINDOW	DIAMETER MAX.	OVERALL LENGTH MAX	OVERALL LENGTH MIN	WEIGHT
		IN	MM	THREAD	MM		BASE STYLE	SIZE	MM	MM	MM	G
10050050W	JT1 WITH ADAPTOR	0.276	7	7/16”-20 F	58	NO	FLAT BEARING	LARGE	38	292	264	970
10050050	JT1 WITH ADAPTOR	0.276	7	7/16”-20 F	58	NO	FLAT BEARING	SMALL	38	292	264	970
10050000W	JT1 WITH ADAPTOR	0.276	7	M10 X 1	58	NO	FLAT BEARING	LARGE	38	292	264	970
10050000	JT1 WITH ADAPTOR	0.276	7	M10 X 1	58	NO	FLAT BEARING	SMALL	38	292	264	970

RB 406 - Microstop Cage

Stroke 14mm/0.55”
Cutter Thread M10 x 1

- This drill cage has been designed for use with cutter of 7/8” to 1.1/2” dia.
- Different mounting bases available
- Detachable spindle adaptor Jacobs No 1 taper provides alternative methods for use :
- - In combination with 3 jaw chuck using 10mm/0.39” shank.
- - Mounting direct onto machine spindle using Jacobs No 1 taper. This method provides increased level of concentricity, while reducing the length and weight
- of the drill / tool assembly. This results in better performance, improved machining and less fatigue on the operator.
- Cemented, hardened and ground chrome-nickel steel spindle mounted on 3 needle-bearings and a thrust bearing.
- Microstop depth adjustment (1 scale division = .001”).
- Microstop depth setting is held securely in place by locknut with seal. This patented feature allows an easy loosening of the lock-nut without damage to the drill cage.

MODEL	SHANK		CUTTER	STROKE	VACUUM	MOUNTING	WINDOW	DIAMETER MAX.	OVERALL LENGTH MAX	OVERALL LENGTH MIN	WEIGHT
	IN	MM	THREAD	MM		BASE STYLE	SIZE	MM	MM	MM	G
10030105W	0.39	10	M10 X 1	14	NO	NONE/FLAT BASE	LARGE	36	163	136	545
10030010W	0.39	10	M10 X 1	14	NO	NONE/FLAT BASE	LARGE	36	163	136	545
10030010	0.39	10	M10 X 1	14	NO	NONE/FLAT BASE	SMALL	36	163	136	545
10030105	0.39	10	M10 X 1	14	NO	NONE/FLAT BASE	SMALL	36	163	136	545

RB41/RB42 Series - Compression Riveter - C-Yoke Type

Up to 3/16” | 4.8mm Capacity Al rivets

- Smooth controlled throttle movement for fast and slow approach.
- Equipped with a safety throttle lever.
- Standard C Yoke Jaws - Special Versions Available
- The operator can adjust exactly the position of the rivet by adjusting the snap holder (stroke 3mm/0.12”). This allows the operator to use the same rivet set for different thicknesses.
- Different force/capacity options to suit the specific riveting requirements
- Select Rivet Set from:-
- RB 400 for countersink rivets
- RB 401 for universal head type rivets
- RB 402 for special reduced universal head rivets
- To develop maximum power the riveter must squeeze the rivet near to the end of the riveting stroke. Therefore, the combined length of the two rivets sets must be correct.
- Determine the correct length of rivet sets as shown

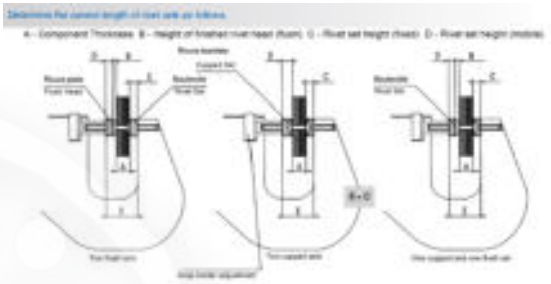

MODEL	RIVET SQUEEZER SET SHANK DIAMETER	CAPACITY ALUMINUM RIVETS	MAXIMUM FORCE	REACH	GAP	MAX TRAVEL	WEIGHT	LENGTH
		MM I IN	T I LB	MM I IN	MM I IN	MM I IN	LB	IN
60103010	STD DIAMETER 5 MM	3.6MM I 9/64IN	1.4T I 3090 LBS	50 MM I 2.00 IN	36 I 1.41	35 I 1.38	4.8	10.8
60103110	STD DIAMETER 3/16”	3.6MM I 9/64IN	1.4T I 3090 LBS	50 MM I 2.00 IN	36 I 1.41	35 I 1.38	4.8	10.8
60102010	STD DIAMETER 5 MM	4.8MM I 3/16IN	2.2T I 4850 LBS	50 MM I 2.00 IN	35 I 1.38	34 I 1.34	6.7	13.4
60102110	STD DIAMETER 3/16”	4.8MM I 3/16IN	2.2T I 4850 LBS	50 MM I 2.00 IN	35 I 1.38	34 I 1.34	6.7	13.4

RB43/RB40/RB44 Series - Compression Riveter- Alligator Jaw Type

Up to 7/32” | 5.6mm Capacity Al rivets

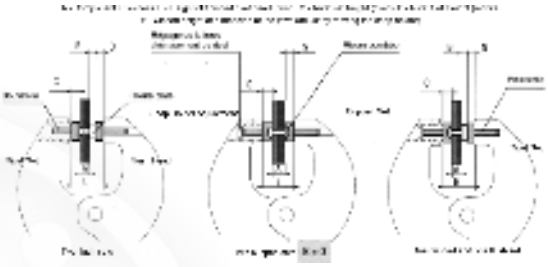

- Smooth controlled throttle movement for fast and slow approach.
- Equipped with a safety throttle lever.
- Standard Alligator Jaws - Special Versions Available
- The operator can adjust exactly the position of the rivet by adjusting the snap holder (stroke 5 mm/0.12”). This allows the operator to use the same rivet set for different thicknesses.
- Different force/capacity options to suit the specific riveting requirements
- Select Rivet Set from:-
- RB 400 for countersink rivets
- RB 401 for universal head type rivets
- RB 402 for special reduced universal head rivets
- To develop maximum power the riveter must squeeze the rivet near to the end of the riveting stroke. Therefore, the combined length of the two rivets sets must be correct.
- Determine the correct length of rivet sets as shown.

MODEL	RIVET SQUEEZER SET SHANK DIAMETER	CAPACITY ALUMINUM RIVETS	MAXIMUM FORCE	REACH	GAP	MAX TRAVEL	WEIGHT	LENGTH
		MM I IN	T I LB	MM I IN	MM I IN	MM I IN	LB	IN
60104010	STD DIAMETER 5 MM	3.6MM | 9/64IN	1.4T | 3090 LBS	60 MM | 2.36 IN	55 MM | 2.16 IN	49 MM | 1.93 IN	4.59 LB	9.7 IN
60104110	STD DIAMETER 3/16”	3.6MM | 9/64IN	1.4T | 3090 LBS	60 MM | 2.36 IN	55 MM | 2.16 IN	49 MM | 1.93 IN	4.59 LB	9.7 IN
60101020	STD DIAMETER 5 MM	3.6MM | 9/64IN	1.8T | 3970 LBS	85 MM | 3.35 IN	55 MM | 2.16 IN	49 MM | 1.93 IN	6.8 LB	15.4 IN
60101120	STD DIAMETER 3/16”	3.6MM | 9/64IN	1.8T | 3970 LBS	85MM | 3.35 IN	55 MM | 2.16 IN	49 MM | 1.93 IN	6.8 LB	15.4 IN
60101010	STD DIAMETER 5 MM	4.8MM | 3/16IN	2.6T | 5730 LBS	60 MM | 2.36 IN	55 MM | 2.16 IN	49 MM | 1.93 IN	6.7 LB	14.4 IN
60101110	STD DIAMETER 3/16”	4.8MM | 3/16IN	2.6T | 5730 LBS	60 MM | 2.36 IN	55 MM | 2.16 IN	49 MM | 1.93 IN	6.7 LB	14.4 IN
60110010	STD DIAMETER 5 MM	5.6MM | 7/32IN	3T | 6610 LBS	58 MM | 2.28 IN	35 MM | 1.38 IN	45 MM | 1.77 IN	11.2 LB	16.8 IN

RB46 Series - Pressure Riveting Unit for C Yoke or Alligator Jaws

Up to 5/16” / 8mm Capacity Al rivets

- The RB 46 pressure riveting assembly comprises a hydropneumatic generator, a hydraulic cylinder and a regulator for setting the force (max. 7 tonnes). It uses various standard and special yokes to form solid rivets made from various materials.
- It is easy to use and adjust, making it suitable for all riveting operations on assembly rigs and for maintenance repairs.
- The work cycle is performed automatically after initiation by the operator.
  - quick feed at low pressure until rivet contact
  - high pressure squeezing at preset forces
  - automatic return.
- The principle of this riveting assembly is based on automatic control of the squeezing force ; no additional adjustment is required to squeeze rivets of the same type, diameter and material on assemblies of varying thicknesses.
- An adjusting nut can be used to reduce the return stroke to shorten the riveting time.

MODEL	LIGHT ALLOY	CAPACITY MONEL	HOSE LENGTH	START CONTROL	MAX CYLINDER STROKE	MAXIMUM FORCE	MINIMUM FORCE	JAWS
	MM | IN	MM | IN	M | FT		MM | IN	T | LB	T | LB	
60203006	8 | 5/16	6.35 | 1/4	1.80 | 5.9	MANUAL CONTROL ON CYLINDER	50 | 2	7T | 15400 LBS	0.4T | 880 LBS	CUSTOM ALLIGATOR OR C YOKE JAWS TO SUIT APPLICATION
60203016	8 | 5/16	6.35 | 1/4	1.80 | 5.9	REMOTE PEDAL CONTROL	50 | 2	7T | 15400 LBS	0.4T | 880 LBS	CUSTOM ALLIGATOR OR C YOKE JAWS TO SUIT APPLICATION
60203106	8 | 5/16	6.35 | 1/4	3 | 9.8	MANUAL CONTROL ON CYLINDER	50 | 2	7T | 15400 LBS	0.4T | 880 LBS	CUSTOM ALLIGATOR OR C YOKE JAWS TO SUIT APPLICATION
60203116	8 | 5/16	6.35 | 1/4	3 | 9.8	REMOTE PEDAL CONTROL	50 | 2	7T | 15400 LBS	0.4T | 880 LBS	CUSTOM ALLIGATOR OR C YOKE JAWS TO SUIT APPLICATION

RB400 - Rivet Set - Countersunk Rivets

- For Countersink Rivets

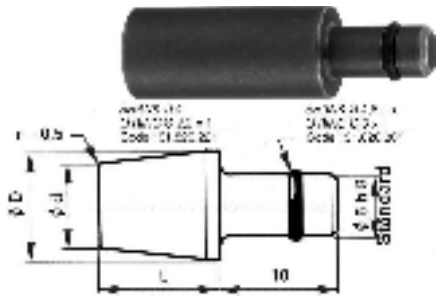

MODEL	SHANK	RIVET DIAMETER	LENGTH		DIAMETER MIN		DIAMETER MAX		USED ON
			MM	IN	MM	IN	MM	IN	
60701005	4H8	1.6 MM | 2.4 MM | 1/16 IN | 3/32 IN	4	0.157	7	0.276	9	0.354	•RB 40-13-30 HAND RIVETER
60701020	4H8	1.6 MM | 2.4 MM | 1/16 IN | 3/32 IN	7	0.276	7	0.276	9	0.354	•RB 40-13-30 HAND RIVETER
60701205	4H8	3.2 MM | 3.6 MM | 1/16 IN | 3/32 IN	4	0.157	9	0.354	9	0.354	•RB 40-13-30 HAND RIVETER
60701220	4H8	3.2 MM | 3.6 MM | 1/16 IN | 3/32 IN	7	0.276	9	0.354	9	0.354	•RB 40-13-30 HAND RIVETER
60703005	5H8	1.6 MM | 2.4 MM | 1/16 IN | 3/32 IN	4	0.157	7	0.276	9	0.354	•RB 41-17-70 HAND RIVETER •ALL COMPRESSION RIVETERS RB41-17-70 HAND RIVETER
60703020	5H8	1.6 MM | 2.4 MM | 1/16 IN | 3/32 IN	7	0.276	7	0.276	9	0.354	•RB 41-17-70 HAND RIVETER •ALL COMPRESSION RIVETERS RB41-17-70 HAND RIVETER
60703040	5H8	1.6 MM | 2.4 MM | 1/16 IN | 3/32 IN	10	0.394	7	0.276	9	0.354	•RB 41-17-70 HAND RIVETER •ALL COMPRESSION RIVETERS RB41-17-70 HAND RIVETER
60703055	5H8	1.6 MM | 2.4 MM | 1/16 IN | 3/32 IN	12.5	0.492	7	0.276	9	0.354	•RB 41-17-70 HAND RIVETER •ALL COMPRESSION RIVETERS RB41-17-70 HAND RIVETER
60703075	5H8	1.6 MM | 2.4 MM | 1/16 IN | 3/32 IN	16	0.63	7	0.276	9	0.354	•RB 41-17-70 HAND RIVETER •ALL COMPRESSION RIVETERS RB41-17-70 HAND RIVETER
60703095	5H8	1.6 MM | 2.4 MM | 1/16 IN | 3/32 IN	20	0.787	7	0.276	9	0.354	•RB 41-17-70 HAND RIVETER •ALL COMPRESSION RIVETERS RB41-17-70 HAND RIVETER
60703220	5H8	3.2 MM | 3.6 MM | 1/16 IN | 3/32 IN	7	0.276	9	0.354	9	0.354	•RB 41-17-70 HAND RIVETER •ALL COMPRESSION RIVETERS RB41-17-70 HAND RIVETER
60703240	5H8	3.2 MM | 3.6 MM | 1/16 IN | 3/32 IN	10	0.394	9	0.354	9	0.354	•RB 41-17-70 HAND RIVETER •ALL COMPRESSION RIVETERS RB41-17-70 HAND RIVETER
60703255	5H8	3.2 MM | 3.6 MM | 1/16 IN | 3/32 IN	12.5	0.492	9	0.354	9	0.354	•RB 41-17-70 HAND RIVETER •ALL COMPRESSION RIVETERS RB41-17-70 HAND RIVETER
60703275	5H8	3.2 MM | 3.6 MM | 1/16 IN | 3/32 IN	16	0.63	9	0.354	9	0.354	•RB 41-17-70 HAND RIVETER •ALL COMPRESSION RIVETERS RB41-17-70 HAND RIVETER
60703295	5H8	3.2 MM | 3.6 MM | 1/16 IN | 3/32 IN	20	0.787	9	0.354	9	0.354	•RB 41-17-70 HAND RIVETER •ALL COMPRESSION RIVETERS RB41-17-70 HAND RIVETER
60703405	5H8	4 MM | 5/32 IN	4	0.157	10	0.394	14	0.551	•RB 41-17-70 HAND RIVETER •ALL COMPRESSION RIVETERS RB41-17-70 HAND RIVETER
60703420	5H8	4 MM | 5/32 IN	7	0.276	10	0.394	14	0.551	•RB 41-17-70 HAND RIVETER •ALL COMPRESSION RIVETERS RB41-17-70 HAND RIVETER
60703440	5H8	4 MM | 5/32 IN	10	0.394	10	0.394	14	0.551	•RB 41-17-70 HAND RIVETER •ALL COMPRESSION RIVETERS RB41-17-70 HAND RIVETER
60703455	5H8	4 MM | 5/32 IN	12.5	0.492	10	0.394	14	0.551	•RB 41-17-70 HAND RIVETER •ALL COMPRESSION RIVETERS RB41-17-70 HAND RIVETER
60703475	5H8	4 MM | 5/32 IN	16	0.63	10	0.394	14	0.551	•RB 41-17-70 HAND RIVETER •ALL COMPRESSION RIVETERS RB41-17-70 HAND RIVETER
60703495	5H8	4 MM | 5/32 IN	20	0.787	10	0.394	14	0.551	•RB 41-17-70 HAND RIVETER •ALL COMPRESSION RIVETERS RB41-17-70 HAND RIVETER
60703505	5H8	4.8 MM | 3/16 IN	4	0.157	12	0.472	14	0.551	•RB 41-17-70 HAND RIVETER •ALL COMPRESSION RIVETERS RB41-17-70 HAND RIVETER
60703520	5H8	4.8 MM | 3/16 IN	7	0.276	12	0.472	14	0.551	•RB 41-17-70 HAND RIVETER •ALL COMPRESSION RIVETERS RB41-17-70 HAND RIVETER
60703540	5H8	4.8 MM | 3/16 IN	10	0.394	12	0.472	14	0.551	•RB 41-17-70 HAND RIVETER •ALL COMPRESSION RIVETERS RB41-17-70 HAND RIVETER
60703555	5H8	4.8 MM | 3/16 IN	12.5	0.492	12	0.472	14	0.551	•RB 41-17-70 HAND RIVETER •ALL COMPRESSION RIVETERS RB41-17-70 HAND RIVETER
60703575	5H8	4.8 MM | 3/16 IN	16	0.63	12	0.472	14	0.551	•RB 41-17-70 HAND RIVETER •ALL COMPRESSION RIVETERS RB41-17-70 HAND RIVETER
60703595	5H8	4.8 MM | 3/16 IN	20	0.787	12	0.472	14	0.551	•RB 41-17-70 HAND RIVETER •ALL COMPRESSION RIVETERS RB41-17-70 HAND RIVETER

MODEL	SHANK	RIVET DIAMETER	LENGTH		DIAMETER MIN		DIAMETER MAX		USED ON
			MM	IN	MM	IN	MM	IN	
60703605	5H8	5.6 MM | 6.4 MM | 7/32 IN | 1/4 IN	4	0.157	16	0.63	16	0.63	•RB 41-17-70 HAND RIVETER •ALL COMPRESSION RIVETERS RB41-17-70 HAND RIVETER
60703620	5H8	5.6 MM | 6.4 MM | 7/32 IN | 1/4 IN	7	0.276	16	0.63	16	0.63	•RB 41-17-70 HAND RIVETER •ALL COMPRESSION RIVETERS RB41-17-70 HAND RIVETER
60703640	5H8	5.6 MM | 6.4 MM | 7/32 IN | 1/4 IN	10	0.394	16	0.63	16	0.63	•RB 41-17-70 HAND RIVETER •ALL COMPRESSION RIVETERS RB41-17-70 HAND RIVETER
60703655	5H8	5.6 MM | 6.4 MM | 7/32 IN | 1/4 IN	12.5	0.492	16	0.63	16	0.63	•RB 41-17-70 HAND RIVETER •ALL COMPRESSION RIVETERS RB41-17-70 HAND RIVETER
60703675	5H8	5.6 MM | 6.4 MM | 7/32 IN | 1/4 IN	16	0.63	16	0.63	16	0.63	•RB 41-17-70 HAND RIVETER •ALL COMPRESSION RIVETERS RB41-17-70 HAND RIVETER
60703695	5H8	5.6 MM | 6.4 MM | 7/32 IN | 1/4 IN	20	0.787	16	0.63	16	0.63	•RB 41-17-70 HAND RIVETER •ALL COMPRESSION RIVETERS RB41-17-70 HAND RIVETER

RB401 - Rivet Set - Universal Head Type Rivets

- For Universal Head Type Rivets

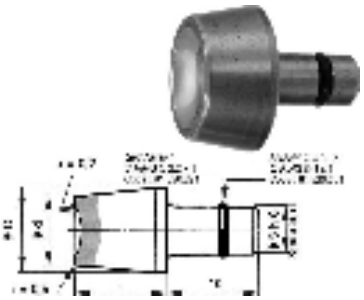

MODEL	SHANK	RIVET DIAMETER	LENGTH		DIAMETER MIN		DIAMETER MAX		USED ON
			MM	IN	MM	IN	MM	IN	
60711105	4H8	2.4 MM | 3/32 IN	4	0.157	7	0.276	9	0.354	•RB 40-13-30 HAND RIVETER
60711120	4H8	2.4 MM | 3/32 IN	7	0.276	7	0.276	9	0.354	•RB 40-13-30 HAND RIVETER
60711205	4H8	2.4 MM | 3/32 IN	4	0.157	9	0.354	9	0.354	•RB 40-13-30 HAND RIVETER
60711220	4H8	2.4 MM | 3/32 IN	7	0.276	9	0.354	9	0.354	•RB 40-13-30 HAND RIVETER
60713105	5H8	2.4 MM | 3/32 IN	4	0.157	7	0.276	9	0.354	•RB 41-17-70 HAND RIVETER •ALL COMPRESSION RIVETERS RB41-17-70 HAND RIVETER
60713120	5H8	2.4 MM | 3/32 IN	7	0.276	7	0.276	9	0.354	•RB 41-17-70 HAND RIVETER •ALL COMPRESSION RIVETERS RB41-17-70 HAND RIVETER
60713140	5H8	2.4 MM | 3/32 IN	10	0.394	7	0.276	9	0.354	•RB 41-17-70 HAND RIVETER •ALL COMPRESSION RIVETERS RB41-17-70 HAND RIVETER
60713155	5H8	2.4 MM | 3/32 IN	12.5	0.492	7	0.276	9	0.354	•RB 41-17-70 HAND RIVETER •ALL COMPRESSION RIVETERS RB41-17-70 HAND RIVETER
60713175	5H8	2.4 MM | 3/32 IN	16	0.63	7	0.276	9	0.354	•RB 41-17-70 HAND RIVETER •ALL COMPRESSION RIVETERS RB41-17-70 HAND RIVETER
60713195	5H8	2.4 MM | 3/32 IN	20	0.787	7	0.276	9	0.354	•RB 41-17-70 HAND RIVETER •ALL COMPRESSION RIVETERS RB41-17-70 HAND RIVETER
60713205	5H8	3.2 MM | 1/8 IN	4	0.157	9	0.354	9	0.354	•RB 41-17-70 HAND RIVETER •ALL COMPRESSION RIVETERS RB41-17-70 HAND RIVETER
60713220	5H8	3.2 MM | 1/8 IN	7	0.276	9	0.354	9	0.354	•RB 41-17-70 HAND RIVETER •ALL COMPRESSION RIVETERS RB41-17-70 HAND RIVETER
60713240	5H8	3.2 MM | 1/8 IN	10	0.394	9	0.354	9	0.354	•RB 41-17-70 HAND RIVETER •ALL COMPRESSION RIVETERS RB41-17-70 HAND RIVETER
60713255	5H8	3.2 MM | 1/8 IN	12.5	0.492	9	0.354	9	0.354	•RB 41-17-70 HAND RIVETER •ALL COMPRESSION RIVETERS RB41-17-70 HAND RIVETER
60713275	5H8	3.2 MM | 1/8 IN	16	0.63	9	0.354	9	0.354	•RB 41-17-70 HAND RIVETER •ALL COMPRESSION RIVETERS RB41-17-70 HAND RIVETER
60713295	5H8	3.2 MM | 1/8 IN	20	0.787	9	0.354	9	0.354	•RB 41-17-70 HAND RIVETER •ALL COMPRESSION RIVETERS RB41-17-70 HAND RIVETER
60713405	5H8	4 MM | 5/32 IN	4	0.157	10	0.394	14	0.551	•RB 41-17-70 HAND RIVETER •ALL COMPRESSION RIVETERS RB41-17-70 HAND RIVETER
60713420	5H8	4 MM | 5/32 IN	7	0.276	10	0.394	14	0.551	•RB 41-17-70 HAND RIVETER •ALL COMPRESSION RIVETERS RB41-17-70 HAND RIVETER
60713440	5H8	4 MM | 5/32 IN	10	0.394	10	0.394	14	0.551	•RB 41-17-70 HAND RIVETER •ALL COMPRESSION RIVETERS RB41-17-70 HAND RIVETER
60713455	5H8	4 MM | 5/32 IN	12.5	0.492	10	0.394	14	0.551	•RB 41-17-70 HAND RIVETER •ALL COMPRESSION RIVETERS RB41-17-70 HAND RIVETER
60713475	5H8	4 MM | 5/32 IN	16	0.63	10	0.394	14	0.551	•RB 41-17-70 HAND RIVETER •ALL COMPRESSION RIVETERS RB41-17-70 HAND RIVETER
60713495	5H8	4 MM | 5/32 IN	20	0.787	10	0.394	14	0.551	•RB 41-17-70 HAND RIVETER •ALL COMPRESSION RIVETERS RB41-17-70 HAND RIVETER
60713505	5H8	4.8 MM | 3/26 IN	4	0.157	12	0.472	14	0.551	•RB 41-17-70 HAND RIVETER •ALL COMPRESSION RIVETERS RB41-17-70 HAND RIVETER
60713520	5H8	4.8 MM | 3/26 IN	7	0.276	12	0.472	14	0.551	•RB 41-17-70 HAND RIVETER •ALL COMPRESSION RIVETERS RB41-17-70 HAND RIVETER
60713540	5H8	4.8 MM | 3/26 IN	10	0.394	12	0.472	14	0.551	•RB 41-17-70 HAND RIVETER •ALL COMPRESSION RIVETERS RB41-17-70 HAND RIVETER
60713555	5H8	4.8 MM | 3/26 IN	12.5	0.492	12	0.472	14	0.551	•RB 41-17-70 HAND RIVETER •ALL COMPRESSION RIVETERS RB41-17-70 HAND RIVETER
60713575	5H8	4.8 MM | 3/26 IN	16	0.63	12	0.472	14	0.551	•RB 41-17-70 HAND RIVETER •ALL COMPRESSION RIVETERS RB41-17-70 HAND RIVETER

MODEL	SHANK	RIVET DIAMETER	LENGTH		DIAMETER MIN		DIAMETER MAX		USED ON
			MM	IN	MM	IN	MM	IN	
60713595	5H8	4.8 MM | 3/26 IN	20	0.787	12	0.472	14	0.551	•RB 41-17-70 HAND RIVETER •ALL COMPRESSION RIVETERS RB41-17-70 HAND RIVETER
60713605	5H8	5.6 MM | 7/32 IN	4	0.157	14	0.551	16	0.63	•RB 41-17-70 HAND RIVETER •ALL COMPRESSION RIVETERS RB41-17-70 HAND RIVETER
60713620	5H8	5.6 MM | 7/32 IN	7	0.276	14	0.551	16	0.63	•RB 41-17-70 HAND RIVETER •ALL COMPRESSION RIVETERS RB41-17-70 HAND RIVETER
60713640	5H8	5.6 MM | 7/32 IN	10	0.394	14	0.551	16	0.63	•RB 41-17-70 HAND RIVETER •ALL COMPRESSION RIVETERS RB41-17-70 HAND RIVETER
60713655	5H8	5.6 MM | 7/32 IN	12.5	0.492	14	0.551	16	0.63	•RB 41-17-70 HAND RIVETER •ALL COMPRESSION RIVETERS RB41-17-70 HAND RIVETER
60713675	5H8	5.6 MM | 7/32 IN	16	0.63	14	0.551	16	0.63	•RB 41-17-70 HAND RIVETER •ALL COMPRESSION RIVETERS RB41-17-70 HAND RIVETER
60713695	5H8	5.6 MM | 7/32 IN	20	0.787	14	0.551	16	0.63	•RB 41-17-70 HAND RIVETER •ALL COMPRESSION RIVETERS RB41-17-70 HAND RIVETER
60713705	5H8	6.4 MM | 1/4 IN	4	0.157	16	0.63	16	0.63	•RB 41-17-70 HAND RIVETER •ALL COMPRESSION RIVETERS RB41-17-70 HAND RIVETER
60713720	5H8	6.4 MM | 1/4 IN	7	0.276	16	0.63	16	0.63	•RB 41-17-70 HAND RIVETER •ALL COMPRESSION RIVETERS RB41-17-70 HAND RIVETER
60713740	5H8	6.4 MM | 1/4 IN	10	0.394	16	0.63	16	0.63	•RB 41-17-70 HAND RIVETER •ALL COMPRESSION RIVETERS RB41-17-70 HAND RIVETER
60713755	5H8	6.4 MM | 1/4 IN	12.5	0.492	16	0.63	16	0.63	•RB 41-17-70 HAND RIVETER •ALL COMPRESSION RIVETERS RB41-17-70 HAND RIVETER
60713775	5H8	6.4 MM | 1/4 IN	16	0.63	16	0.63	16	0.63	•RB 41-17-70 HAND RIVETER •ALL COMPRESSION RIVETERS RB41-17-70 HAND RIVETER
60713795	5H8	6.4 MM | 1/4 IN	20	0.787	16	0.63	16	0.63	•RB 41-17-70 HAND RIVETER •ALL COMPRESSION RIVETERS RB41-17-70 HAND RIVETER

RB402 - Rivet Set - Special Reduced Universal Head Type Rivets

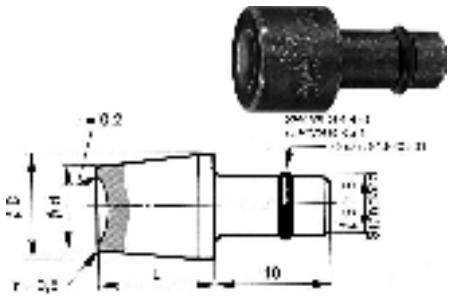

- For Special Reduced Universal Head Rivets

MODEL	SHANK	RIVET DIAMETER	LENGTH		DIAMETER MIN		DIAMETER MAX		USED ON
			MM	IN	MM	IN	MM	IN	
60723105	5H8	2.4 MM | 3/32 IN	4	0.157	7	0.276	9	0.354	•RB 41-17-70 HAND RIVETER •ALL COMPRESSION RIVETERS RB41-17-70 HAND RIVETER
60723120	5H8	2.4 MM | 3/32 IN	7	0.276	7	0.276	9	0.354	•RB 41-17-70 HAND RIVETER •ALL COMPRESSION RIVETERS RB41-17-70 HAND RIVETER
60723140	5H8	2.4 MM | 3/32 IN	10	0.394	7	0.276	9	0.354	•RB 41-17-70 HAND RIVETER •ALL COMPRESSION RIVETERS RB41-17-70 HAND RIVETER
60723155	5H8	2.4 MM | 3/32 IN	12.5	0.492	7	0.276	9	0.354	•RB 41-17-70 HAND RIVETER •ALL COMPRESSION RIVETERS RB41-17-70 HAND RIVETER
60723175	5H8	2.4 MM | 3/32 IN	16	0.63	7	0.276	9	0.354	•RB 41-17-70 HAND RIVETER •ALL COMPRESSION RIVETERS RB41-17-70 HAND RIVETER
60723195	5H8	2.4 MM | 3/32 IN	20	0.787	7	0.276	9	0.354	•RB 41-17-70 HAND RIVETER •ALL COMPRESSION RIVETERS RB41-17-70 HAND RIVETER
60723205	5H8	3.2 MM | 1/8 IN	4	0.157	9	0.354	9	0.354	•RB 41-17-70 HAND RIVETER •ALL COMPRESSION RIVETERS RB41-17-70 HAND RIVETER
60723220	5H8	3.2 MM | 1/8 IN	7	0.276	9	0.354	9	0.354	•RB 41-17-70 HAND RIVETER •ALL COMPRESSION RIVETERS RB41-17-70 HAND RIVETER
60723240	5H8	3.2 MM | 1/8 IN	10	0.394	9	0.354	9	0.354	•RB 41-17-70 HAND RIVETER •ALL COMPRESSION RIVETERS RB41-17-70 HAND RIVETER
60723255	5H8	3.2 MM | 1/8 IN	12.5	0.492	9	0.354	9	0.354	•RB 41-17-70 HAND RIVETER •ALL COMPRESSION RIVETERS RB41-17-70 HAND RIVETER
60723275	5H8	3.2 MM | 1/8 IN	16	0.63	9	0.354	9	0.354	•RB 41-17-70 HAND RIVETER •ALL COMPRESSION RIVETERS RB41-17-70 HAND RIVETER
60723295	5H8	3.2 MM | 1/8 IN	20	0.787	9	0.354	9	0.354	•RB 41-17-70 HAND RIVETER •ALL COMPRESSION RIVETERS RB41-17-70 HAND RIVETER
60723405	5H8	4 MM | 5/32 IN	4	0.157	10	0.394	14	0.551	•RB 41-17-70 HAND RIVETER •ALL COMPRESSION RIVETERS RB41-17-70 HAND RIVETER
60723420	5H8	4 MM | 5/32 IN	7	0.276	10	0.394	14	0.551	•RB 41-17-70 HAND RIVETER •ALL COMPRESSION RIVETERS RB41-17-70 HAND RIVETER
60723440	5H8	4 MM | 5/32 IN	10	0.394	10	0.394	14	0.551	•RB 41-17-70 HAND RIVETER •ALL COMPRESSION RIVETERS RB41-17-70 HAND RIVETER
60723455	5H8	4 MM | 5/32 IN	12.5	0.492	10	0.394	14	0.551	•RB 41-17-70 HAND RIVETER •ALL COMPRESSION RIVETERS RB41-17-70 HAND RIVETER
60723475	5H8	4 MM | 5/32 IN	16	0.63	10	0.394	14	0.551	•RB 41-17-70 HAND RIVETER •ALL COMPRESSION RIVETERS RB41-17-70 HAND RIVETER
60723495	5H8	4 MM | 5/32 IN	20	0.787	10	0.394	14	0.551	•RB 41-17-70 HAND RIVETER •ALL COMPRESSION RIVETERS RB41-17-70 HAND RIVETER
60723505	5H8	4.8 MM | 3/32 IN	4	0.157	12	0.472	14	0.551	•RB 41-17-70 HAND RIVETER •ALL COMPRESSION RIVETERS RB41-17-70 HAND RIVETER
60723520	5H8	4.8 MM | 3/32 IN	7	0.276	12	0.472	14	0.551	•RB 41-17-70 HAND RIVETER •ALL COMPRESSION RIVETERS RB41-17-70 HAND RIVETER
60723540	5H8	4.8 MM | 3/32 IN	10	0.394	12	0.472	14	0.551	•RB 41-17-70 HAND RIVETER •ALL COMPRESSION RIVETERS RB41-17-70 HAND RIVETER
60723555	5H8	4.8 MM | 3/32 IN	12.5	0.492	12	0.472	14	0.551	•RB 41-17-70 HAND RIVETER •ALL COMPRESSION RIVETERS RB41-17-70 HAND RIVETER
60723575	5H8	4.8 MM | 3/32 IN	16	0.63	12	0.472	14	0.551	•RB 41-17-70 HAND RIVETER •ALL COMPRESSION RIVETERS RB41-17-70 HAND RIVETER
60723595	5H8	4.8 MM | 3/32 IN	20	0.787	12	0.472	14	0.551	•RB 41-17-70 HAND RIVETER •ALL COMPRESSION RIVETERS RB41-17-70 HAND RIVETER
60723605	5H8	5.6 MM | 7/32 IN	4	0.157	14	0.551	14	0.551	•RB 41-17-70 HAND RIVETER •ALL COMPRESSION RIVETERS RB41-17-70 HAND RIVETER

MODEL	SHANK	RIVET DIAMETER	LENGTH		DIAMETER MIN		DIAMETER MAX		USED ON
			MM	IN	MM	IN	MM	IN	
60723620	5H8	5.6 MM | 7/32 IN	7	0.276	14	0.551	14	0.551	•RB 41-17-70 HAND RIVETER •ALL COMPRESSION RIVETERS RB41-17-70 HAND RIVETER
60723640	5H8	5.6 MM | 7/32 IN	10	0.394	14	0.551	14	0.551	•RB 41-17-70 HAND RIVETER •ALL COMPRESSION RIVETERS RB41-17-70 HAND RIVETER
60723655	5H8	5.6 MM | 7/32 IN	12.5	0.492	14	0.551	14	0.551	•RB 41-17-70 HAND RIVETER •ALL COMPRESSION RIVETERS RB41-17-70 HAND RIVETER
60723675	5H8	5.6 MM | 7/32 IN	16	0.63	14	0.551	14	0.551	•RB 41-17-70 HAND RIVETER •ALL COMPRESSION RIVETERS RB41-17-70 HAND RIVETER
60723695	5H8	5.6 MM | 7/32 IN	20	0.787	14	0.551	14	0.551	•RB 41-17-70 HAND RIVETER •ALL COMPRESSION RIVETERS RB41-17-70 HAND RIVETER

Rivet Cutting Pliers

- This very simple hand cutting tool includes a microstop adjustment for a clean, precise cut of all aluminium rivets.

MODEL	MINIMUM UNDERHEAD	RIVET	TOLERANCE OVER
	CUTTING LENGTH	DIAMETER	LENGTH
60001000	5 MM - 0.197" DIA	2 MM | 2.5 MM | 3 MM | 3.5 MM | 4 MM | 5 MM | 6 MM	0,5 MM - 0.02" DIA
RC-60001005	5 MM - 0.197" DIA	1/16 IN | 3/32 IN | 1/8 IN | 9/64 IN | 5/32 IN | 3/16 IN | 7/32 IN	0,5 MM - 0.02" DIA

Ring Cutters

Easy removal of Rivet Rings 4.00 - 8.00mm

- Simple, rugged and handy, this tool has been designed to afford the easy removal of rivet rings (Huck, LGP type or others) without risk of damage to the hole or skin.
- Strong mechanical leverage enables clean removal of rings into two half shells.
- Quick change levers enable the ring cutter to be used in either « in line » or « right angle » position.
- Reduced dimension of the working part.
- No adjustment or setting required for use which is a considerable time-saver for rivet ring removal.
- Removable, quick change anvils.
- Each tool is supplied with 1 set of anvils for one rivet ring diameter.

MODEL	FASTENER SIZE
60004000	4 MM | 0.1579 IN
60004017	4.16 MM | 0.1638 IN
60004001	4.8 MM | 0.188 IN
60004005	5 MM | 0.1969 IN
60004008	5.6 MM | 0.219 IN
60004010	6 MM | 0.2362 IN
60004016	6.35 MM | 0.250 IN
60004015	7.94 MM | 0.313 IN

E & F Series - Rivet Hammer

Up to 1/4” Rivets

- For driving 1/8”-1/4” (3-6mm) rivets
- Standard beehive retainer
- Built-in air regulator controls power output
- Spool valve for precise speed control

MODEL	RETAINER TYPE	BORE	BLOWS PER MINUTE	WEIGHT	LENGTH	AIR INLET SIZE
		IN		LB	IN	IN
E4-2335	OPEN	0.50	1600	2.6	8.4	1/4
E4-2336	OPEN	0.50	1400	2.9	9.4	1/4
F4-PT-RT-B	BEEHIVE SPRING	0.56	1700	3.31	8.7	1/4

All tools performance rated @ 90 psi / 620 kPa air pressure.Minimum Hose I.D.: 1/4 in / 6.4 mmStandard Equipment: Operating instructions & service manualE4-2335 and E5-2336 have minimum order quantities

14CF / 14CN Series - Rivet Shaver

14CF 0.4hp / 0.3kW 29000rpm

14CN 0.9hp / 0.75kW 20000rpm

- 0.00025 or 0.0005 Cutter Adjustment
- Optional Adjustment Guard 02-8150 or Stabilizer 02-8120 Sold Separately
- These rivet shavers accept skirts for cutters up to 3/4” in diameter - sold separately

MODEL	DESCRIPTION	SPEED	CUTTER ADJUSTMENT	WEIGHT		LENGTH	
		R/MIN	IN	LB	KG	IN	MM
14CFS60-96	RIVET SHAVER 0.4HP	29000 R/MIN	0.0005 CUTTER ADJUSTMENT	2.20	1	8.2	208.3
14CFS60-98	RIVET SHAVER 0.4HP	29000 R/MIN	0.00025 CUTTER ADJUSTMENT	2.20	1	8.2	208.3
14CNL60-96	RIVET SHAVER 0.9HP	20000 R/MIN	0.0005 CUTTER ADJUSTMENT	4.41	2	8.9	226.1

All tools performance rated @ 90psi / 620 kPa air pressure.
Minimum Hose I.D.: 5/16in / 7.9mmmm

Thickness Gauge

0 to 1/14” (30mm)

- Simple and handy, equipped with a flexible, highly-efficient safety locking device, this inspection tool is designed for checking all thicknesses from 0 to 1 1/4” (30 mm).
- The accurate scale allows reading to 0.004” (0,1 mm).

MODEL	DESCRIPTION
60901000	RB 2010 - THICKNESS GAUGE

Wire Brush

- Used for cleaning paint, dirt, rust from around rivet or bolt holes. By placing the pilot in the rivet hole the cleaning process is
- secure. Assures a positive electrical contact to eliminate static electricity buildup.
- Wire diameter 0.008”
- Solid item, with a steel shank + pilot, nylon body in a copper sleeve, 4 steel brushes set at 90°.
- Backfacing wire brushes, code 32115… and alternative diameters may be manufactured on request

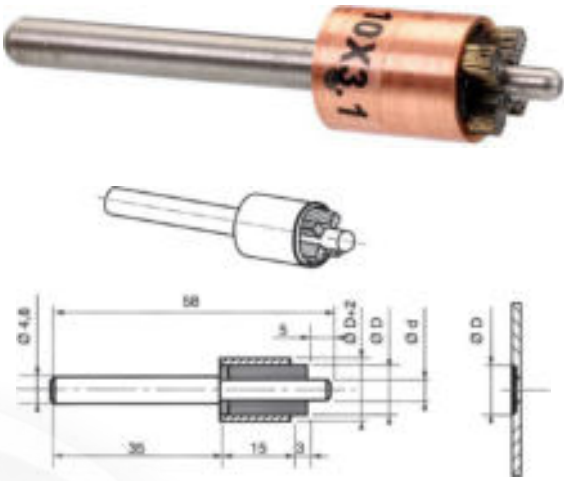

MODEL	DESCRIPTION	DIAMETER	DIAMETER
		SMALL D	LARGE D
32110102	WIRE BRUSH FOR RIVET HOLES	2.40	10
32110103	WIRE BRUSH FOR RIVET HOLES	2.40	12
32110069	WIRE BRUSH FOR RIVET HOLES	2.50	10
32110097	WIRE BRUSH FOR RIVET HOLES	3.00	12
32110060	WIRE BRUSH FOR RIVET HOLES	3.00	13
32110070	WIRE BRUSH FOR RIVET HOLES	3.10	10
32110072	WIRE BRUSH FOR RIVET HOLES	3.10	12
32110067	WIRE BRUSH FOR RIVET HOLES	3.20	8
32110071	WIRE BRUSH FOR RIVET HOLES	3.50	10
32110073	WIRE BRUSH FOR RIVET HOLES	3.50	12
32110065	WIRE BRUSH FOR RIVET HOLES	4.00	10
32110055	WIRE BRUSH FOR RIVET HOLES	4.00	12
32110063	WIRE BRUSH FOR RIVET HOLES	4.00	14
32110075	WIRE BRUSH FOR RIVET HOLES	4.10	16
32110074	WIRE BRUSH FOR RIVET HOLES	4.80	12
32110057	WIRE BRUSH FOR RIVET HOLES	4.80	13
32110064	WIRE BRUSH FOR RIVET HOLES	4.80	14
32110076	WIRE BRUSH FOR RIVET HOLES	4.80	16
32110062	WIRE BRUSH FOR RIVET HOLES	4.80	18
32110078	WIRE BRUSH FOR RIVET HOLES	5.00	10
32110079	WIRE BRUSH FOR RIVET HOLES	5.00	12
32110056	WIRE BRUSH FOR RIVET HOLES	5.00	13
32110082	WIRE BRUSH FOR RIVET HOLES	5.00	14
32110119	WIRE BRUSH FOR RIVET HOLES	5.00	16
32110077	WIRE BRUSH FOR RIVET HOLES	5.00	20
32110081	WIRE BRUSH FOR RIVET HOLES	5.20	14
32110080	WIRE BRUSH FOR RIVET HOLES	6.00	14
32110098	WIRE BRUSH FOR RIVET HOLES	6.00	16
32110068	WIRE BRUSH FOR RIVET HOLES	6.30	14
32110058	WIRE BRUSH FOR RIVET HOLES	6.30	16
32110059	WIRE BRUSH FOR RIVET HOLES	7.50	14
32110061	WIRE BRUSH FOR RIVET HOLES	7.50	23
32110066	WIRE BRUSH FOR RIVET HOLES	7.80	20
32110083	WIRE BRUSH FOR RIVET HOLES	9.30	21

Our commitment to service spans the globe

What is

Cleco is known for producing great tools that your manufacturing facility depends on to keep your line running. Cleco stands behind our products and our partners by supporting your investment with on-going product service and support programs through Cleco Care.

Cleco Care provides a wide range of continued technical support and product expertise around the globe. Our Cleco Care Global Service Centers are committed to providing data-driven customer solutions to reduce total cost of ownership and down-time on your line. We offer a multitude of full-service Cleco Care programs that cover three major components of tool ownership: **Restore**, **Parts**, and **Support**.

Our commitment to our customres starts with our warranties and extends to a range of services that minimize downtime and errors at your assembly plant.

- Repairs are performed with only OEM certified parts and the latest test equipment.
- Preventative maintenance programs tailored for your situation.
- Verification and calibration services.
- Upgrade or retrofitting kits to modernize discontinued or outdated equipment.

Rely on our Cleco Care program for the parts you need, as soon as you need them. Our logistic partners offer world-wide shipments for spare parts and consumables. Our replacement parts program keeps you up and running when you need it most.

- OEM parts that meet our rigorous quality standards around the world.
- Cleco Care's data-driven analytics system predicts wear patterns before they can become problems so we can get you spare parts, fast.

Cleco Care includes a revitalized focus on support, enabling our partners through comprehensive installation and start-up services, specialized technical support, field servicing and top-quality training programs.

- Cleco Care covers every step of setup, programming, parameter-setting, operational support, and calibration.
- Our basic training classes cover all our products, and we offer specially designed trainings to integrate our tools with your software.

Service Centers

North America

Detroit, Michigan
2630 Superior Court
Auburn 48236
United States
1 (248) 391-3700

Lexington, South Carolina
670 Industrial Drive
Lexington 29072
United States
1 (800) 845-5629
1 (803) 951-7510

Queretaro, Mexico
Vialidad Del Pueblito 103
Parque Industrial
Querétaro, QRO 76220
Mexico
52 (442) 211 3800

South America

Sao Paulo, Brazil
Avenida Liberdade 4055
Iporanga-Sorocaba 18087-170
Brazil
55 15 3238 3820

Europe

Westhausen, Germany
IndustriestraBe 1
73463 Westhausen
Germany
49 (0) 73 63 81 0

Asia

Shanghai, China
No. 177 Bibo Road
201, Area C
Shanghai 201203
China
86 21 60880320

India
Gala No. 1, Plot No. 5 S. No. 234, 235 & 245
Indialand Global Industrial Park Taluka-Mulsi, Phase I
Maharashtra 411057
India
91 020 66761111

Solutions are in our DNA

Cleco®
Production Tools

Assembly Tools

Cleco®
Production Tools

Material Removal

Cleco®
Production Tools

Drilling & Riveting

APEX®
ASSEMBLY & FABRICATION TOOLS

Fastening Solutions

TOOLimpex
CZECH REPUBLIC s.r.o.

Hrabinská 498/19, 737 01 Český Těšín, Česka republika
Mobil: +420 731 018 782

© 2019 Cleco Production Tools. All Rights Reserved.